WIRING DIAGRAM

Air Handler with Factory Installed Heat (8 kW, 10kW)

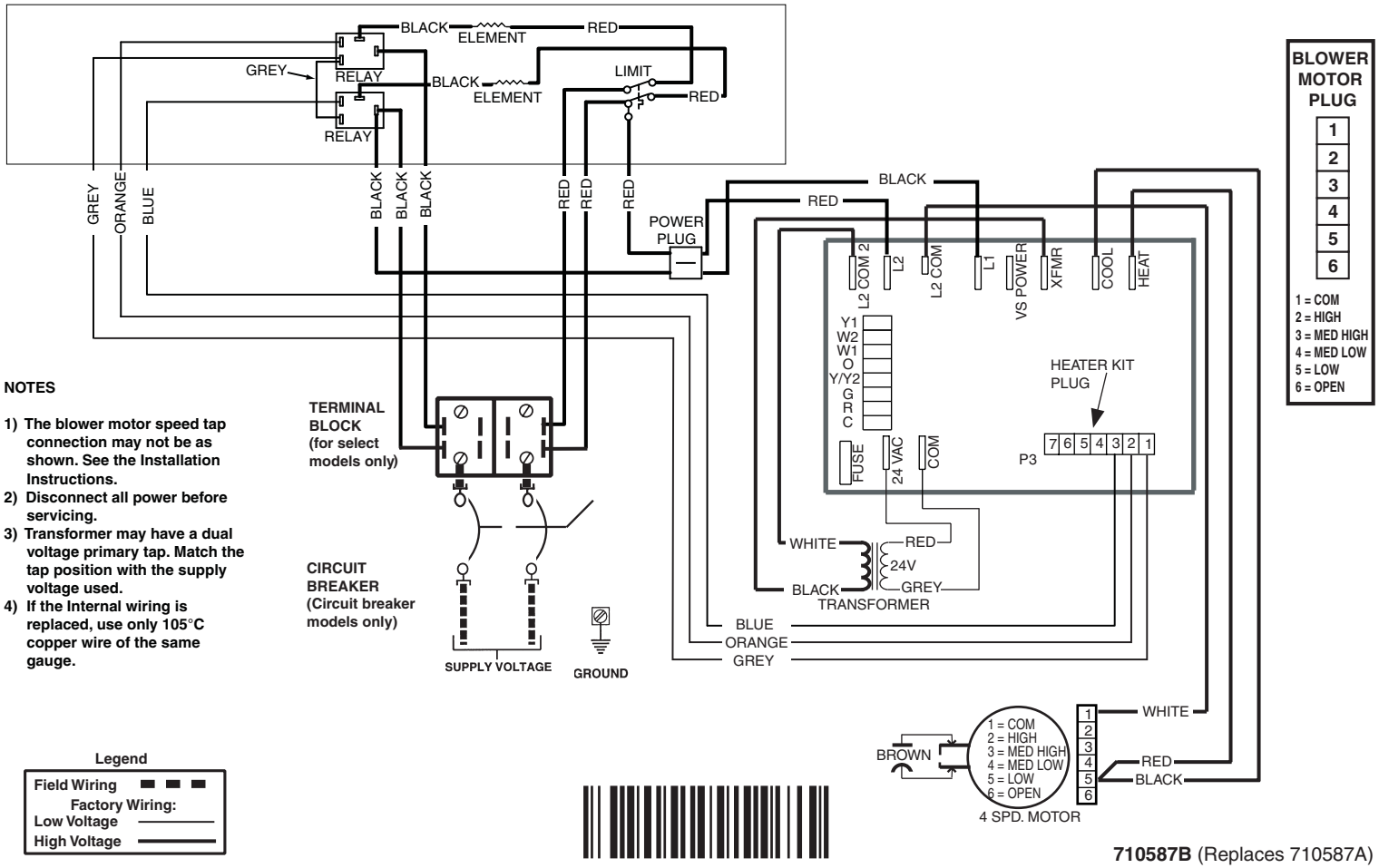

NOTES

1) **The blower motor speed tap connection may not be as shown. See the Installation Instructions.**
2) **Disconnect all power before servicing.**
3) **Transformer may have a dual voltage primary tap. Match the tap position with the supply voltage used.**
4) **If the Internal wiring is replaced, use only 105°C copper wire of the same gauge.**

Legend

Field Wiring	
Factory Wiring:	
Low Voltage	
High Voltage	

710587B (Replaces 710587A)