WIRING DIAGRAM

H6HK008H-01 (without circuit breaker)
H6HK008H-11 (with circuit breaker)
H6HK010H-11 (with circuit breaker)
H6HK010H-01 (without circuit breaker)

8kW, 10kW, 1-Stage, 240 VAC, 1-Phase Electric Heater Kit

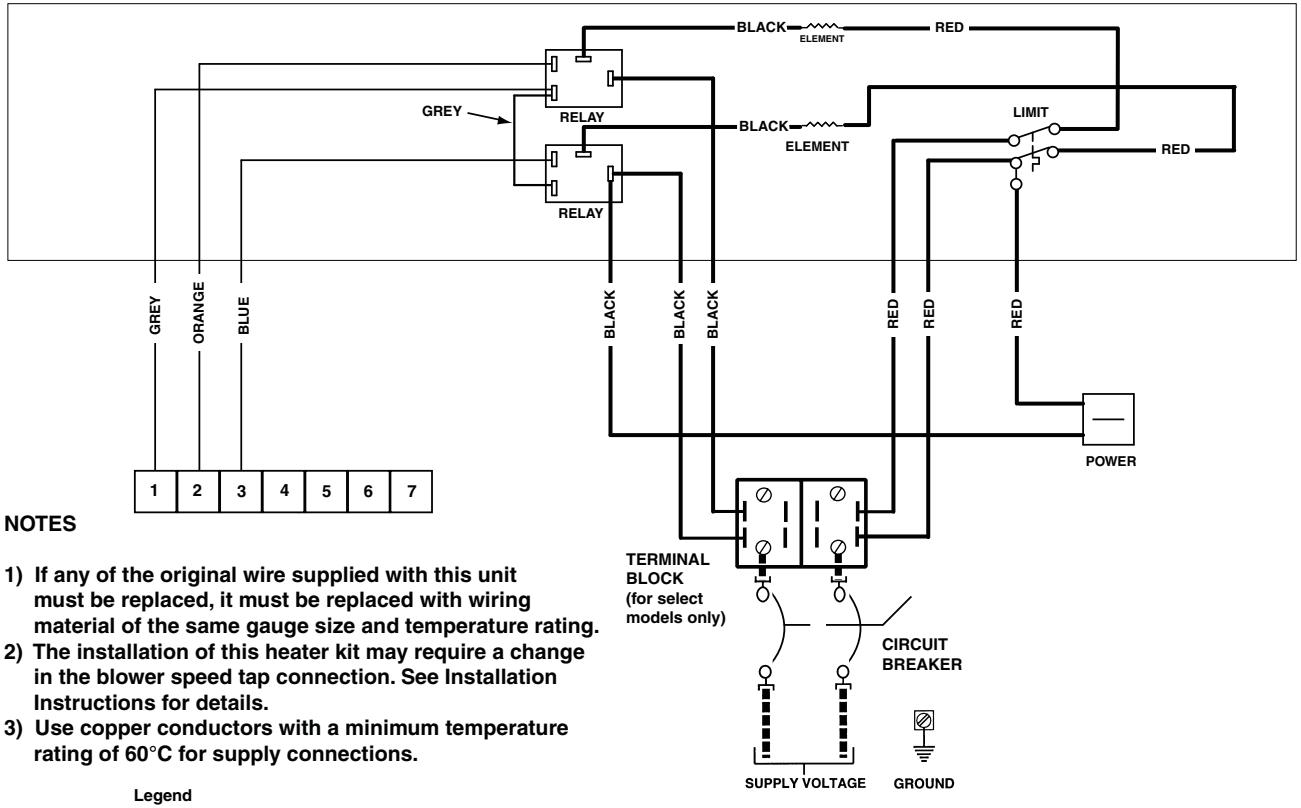

NOTES

1) **If any of the original wire supplied with this unit must be replaced, it must be replaced with wiring material of the same gauge size and temperature rating.**
2) **The installation of this heater kit may require a change in the blower speed tap connection. See Installation Instructions for details.**
3) **Use copper conductors with a minimum temperature rating of 60°C for supply connections.**

Legend

Field Wiring	- - - - - -
Factory Wiring:	
Low Voltage	———
High Voltage	———

710561A (Replaces 7105610)