Wiring Diagram

E(1, 2) EB Electric Furnace

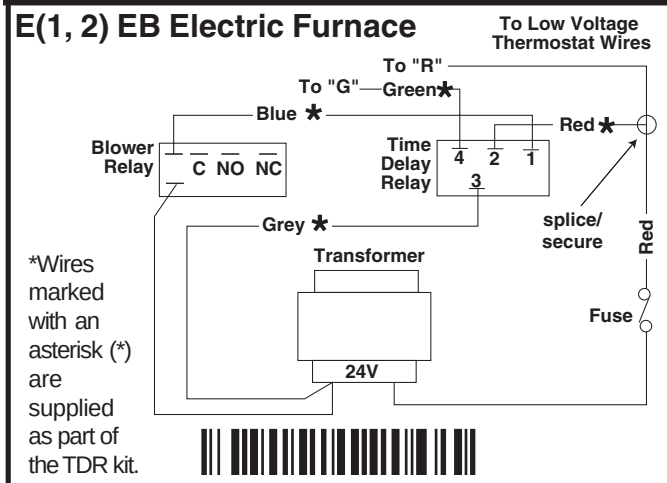

*Wires marked with an asterisk (*) are supplied as part of the TDR kit.

7103720 (Replaces 703802A)

Wiring Diagram

E(1, 2) EB Electric Furnace

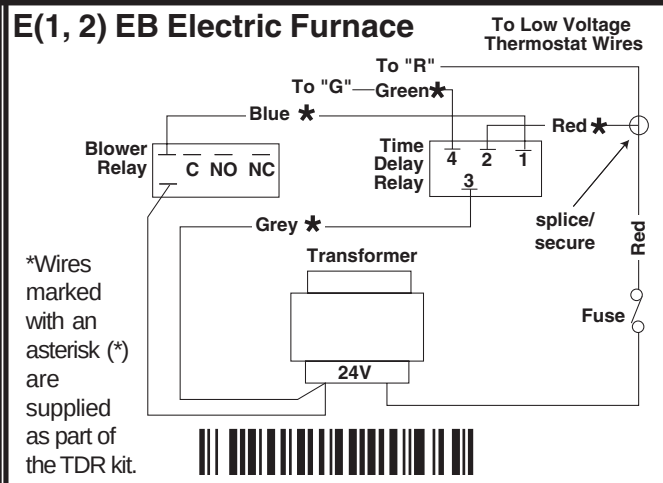

*Wires marked with an asterisk (*) are supplied as part of the TDR kit.

7103720 (Replaces 703802A)

Wiring Diagram

E(1, 2) EB Electric Furnace

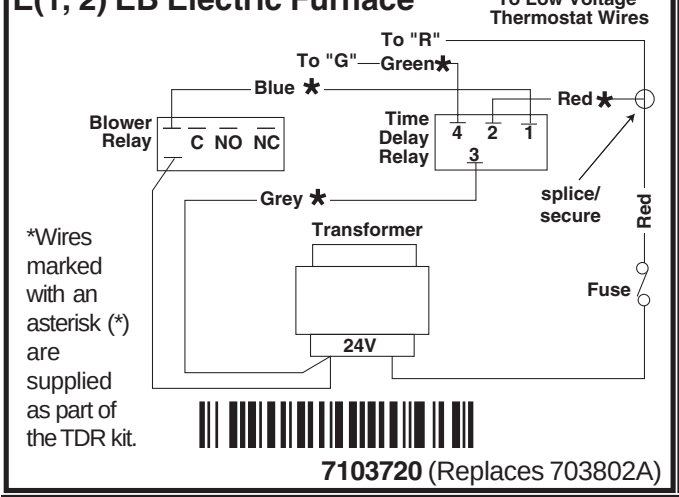

*Wires marked with an asterisk (*) are supplied as part of the TDR kit.

7103720 (Replaces 703802A)

Wiring Diagram

E(1, 2) EB Electric Furnace

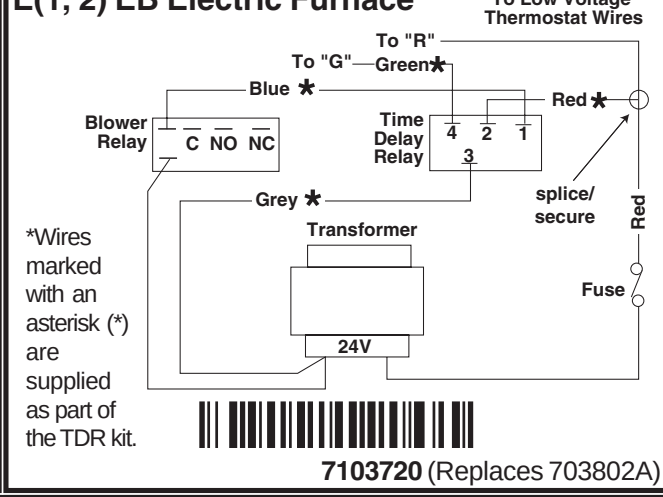

*Wires marked with an asterisk (*) are supplied as part of the TDR kit.

7103720 (Replaces 703802A)

Wiring Diagram

E(1, 2) EB Electric Furnace

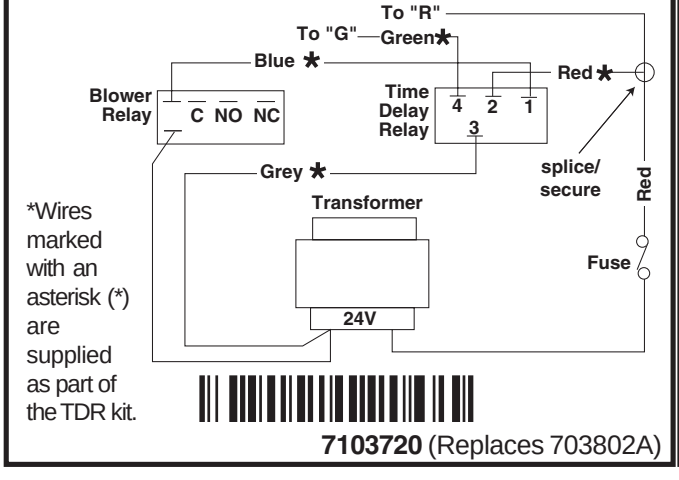

*Wires marked with an asterisk (*) are supplied as part of the TDR kit.

7103720 (Replaces 703802A)

Wiring Diagram

E(1, 2) EB Electric Furnace

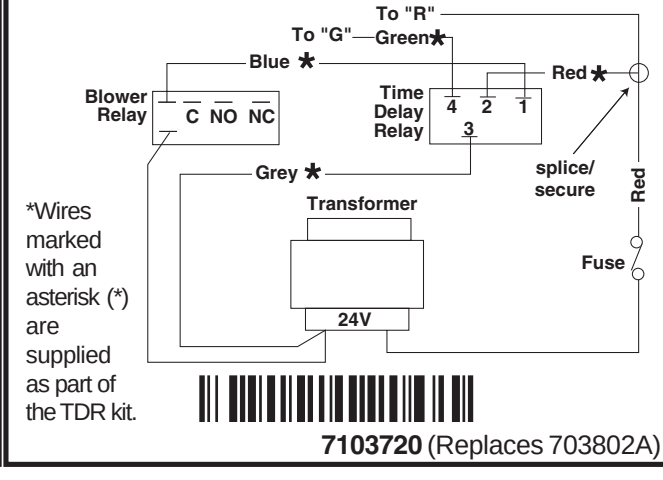

*Wires marked with an asterisk (*) are supplied as part of the TDR kit.

7103720 (Replaces 703802A)