WIRING DIAGRAM

H4HK025H-31A (with circuit breaker) **25 kW, 1-Stage, 240 VAC, 1-Phase Electric Heater Kit**

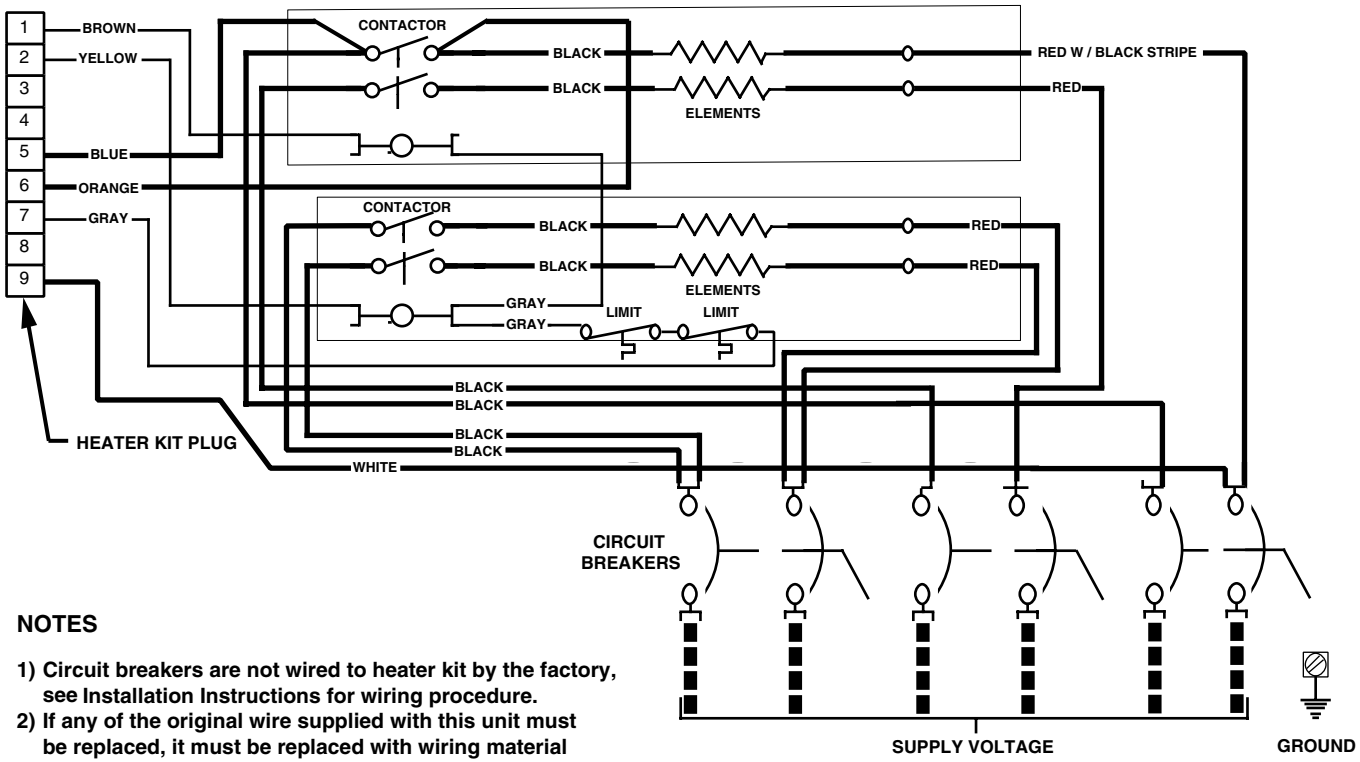

NOTES

1) Circuit breakers are not wired to heater kit by the factory, see Installation Instructions for wiring procedure.
2) If any of the original wire supplied with this unit must be replaced, it must be replaced with wiring material of the same gauge size and temperature rating.
3) The installation of this heater kit may require a change in the blower speed tap connection. See Installation Instructions for details.
4) Use copper conductors with a minimum temperature rating of 60° C for supply connections.

FIELD WIRING
FACTORY WIRING
LOW VOLTAGE
HIGH VOLTAGE

7102770