WIRING DIAGRAM

208/240V, 3-Phase Electric Heater Kit

NOTES:

1) Circuit breakers (When supplied) are not wired to heater kit by the factory, see Installation Instructions for wiring procedure.
2) If any of the original wire supplied with this unit must be replaced, it must be replaced with wiring material
3) The installation of this heater kit may require a change in the blower speed tap connection. See Installation Instructions for details.
4) Aluminum or copper supply conductors are suitable.

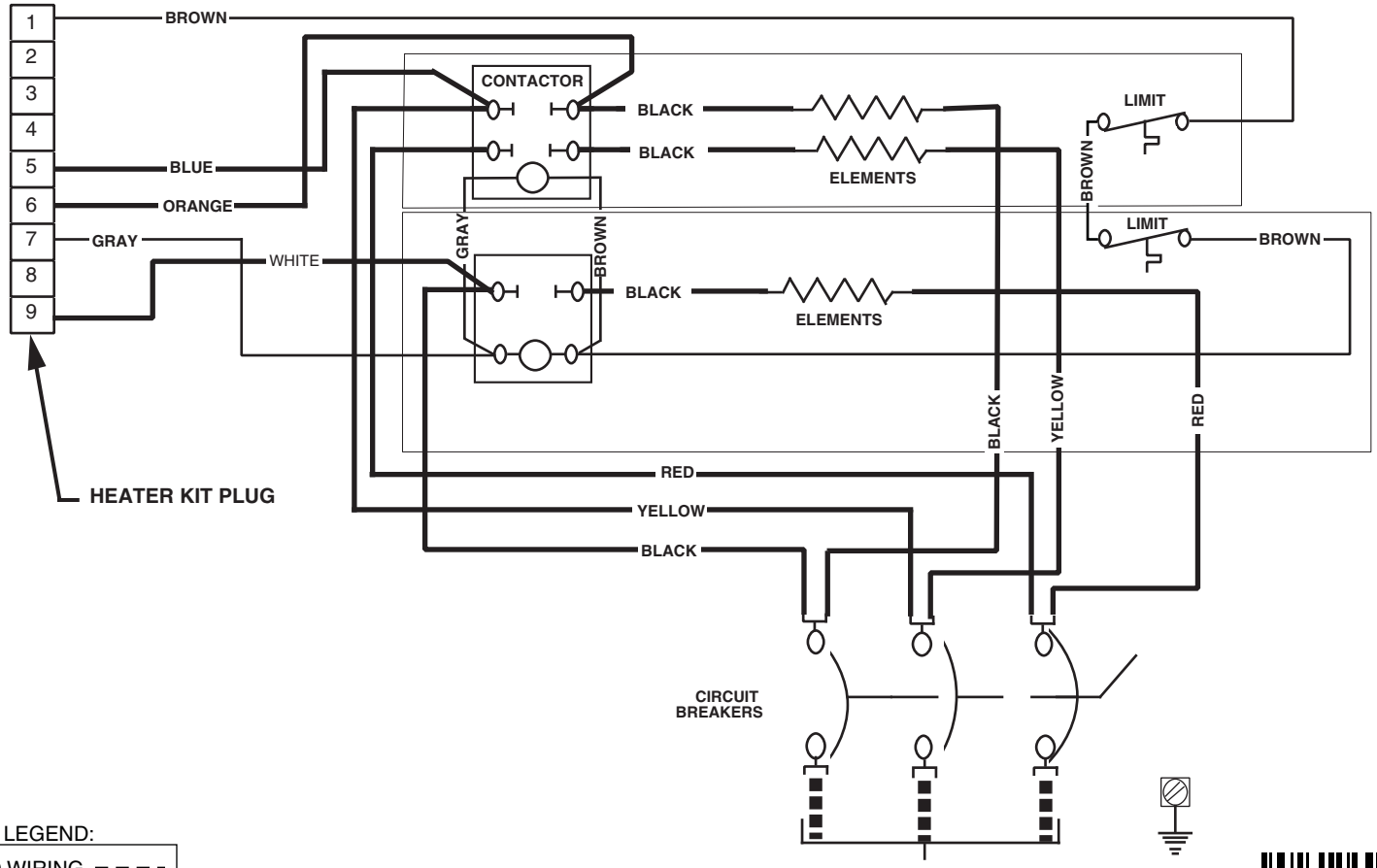

LEGEND:

FIELD WIRING	- - - -
LOW VOLTAGE	———
HIGH VOLTAGE	▬▬▬

710143D
(Replaces 710143C)
04/15