***Q7RD / PPH3RD SERIES** **13 SEER**

INSTALLATION INSTRUCTIONS

Single Package Heat Pump - Single Stage, R-410A

IMPORTANT

ATTENTION INSTALLERS:

It is your responsibility to know this product better than your customer. This includes being able to install the product according to strict safety guidelines and instructing the customer on how to operate and maintain the equipment for the life of the product. Safety should always be the deciding factor when installing this product and using common sense plays an important role as well. Pay attention to all safety warnings and any other special notes highlighted in the manual. Improper installation of the furnace or failure to follow safety warnings could result in serious injury, death, or property damage.

These instructions are primarily intended to assist qualified individuals experienced in the proper installation of this appliance. Some local codes require licensed installation/service personnel for this type of equipment. Please read all instructions carefully before starting the installation. Return these instructions to the customer's package for future reference.

DO NOT DESTROY. PLEASE READ CAREFULLY AND KEEP IN A SAFE PLACE FOR FUTURE REFERENCE.

TABLE OF CONTENTS

IMPORTANT SAFETY INFORMATION

Please read all instructions before servicing this equipment. Pay attention to all safety warnings and any other special notes highlighted in the manual. Safety markings are used frequently throughout this manual to designate a degree or level of seriousness and should not be ignored. **WARNING** indicates a potentially hazardous situation that if not avoided, could result in personal injury or death. **CAUTION** indicates a potentially hazardous situation that if not avoided, may result in minor or moderate injury or property damage.

⚠ WARNING:

ELECTRICAL SHOCK, FIRE OR EXPLOSION HAZARD

Failure to follow safety warnings exactly could result in serious injury or property damage.

Improper servicing could result in dangerous operation, serious injury, death or property damage.

- **Before servicing, disconnect all electrical power to the indoor blower.**
- **When servicing controls, label all wires prior to disconnecting. Reconnect wires correctly.**
- **Verify proper operation after servicing.**

⚠ WARNING:

These units are fully charged with R-410A refrigerant and ready for installation. When a system is installed according to these instructions, no refrigerant charging is required. If repairs make it necessary for evacuation and charging, it should only be attempted by qualified, trained personnel thoroughly familiar with this equipment. Some local codes require licensed installation service personnel to service this type of equipment. Under no circumstances should the homeowner attempt to install and/or service this equipment. Failure to comply with this warning could result in equipment damage, personal injury, or death.

⚠ WARNING:

Do not place combustible material on or against the unit cabinet. Do not place combustible materials, including gasoline and any other flammable vapors and liquids, in the vicinity of the unit.

⚠ WARNING:

PROPOSITION 65 WARNING: This product contains fiberglass wool, a product known to the state of California to cause cancer. Disturbing the insulation of this product during installation, maintenance, or repair will expose you to fiberglass wool.

- **Breathing this material may cause respiratory irritations or may cause lung cancer.**
- **Fiberglass wool may also cause eye irritation, skin sensitization, or other allergic responses in susceptible individuals.**
- **Always wear goggles, disposable gloves, long sleeved shirt, and appropriate breathing protection when working near this insulation. If contact with skin occurs, wash immediately with soap and water. In case of contact with eyes, flush immediately with water for at least 15 minutes. Contact a physician if needed.**

⚠ WARNING:

The information listed below and on the next page must be followed during the installation, service, and operation of this unit. Unqualified individuals should not attempt to interpret these instructions or install this equipment. Failure to follow safety recommendations could result in possible damage to the equipment, serious personal injury or death.

- Before beginning the installation, verify that the unit model is correct for the job. The unit model number is printed on the data label.
- This equipment contains liquid and gaseous refrigerant under high pressure. Installation or servicing should only be performed by qualified trained personnel thoroughly familiar with this type equipment.
- Installation of equipment may require brazing operations. Installer must comply with safety codes and wear appropriate safety equipment (safety glasses, work gloves, fire extinguisher, etc.) when performing brazing operations.
- The installer should become familiar with the units wiring diagram before making any electrical connections to the unit. See the unit wiring label or Figures 9 - 11 (pages 20 - 22).
- Follow all precautions in the literature, on tags, and on labels provided with the equipment. Read and

thoroughly understand the instructions provided with the equipment prior to performing the installation and operational checkout of the equipment.

- Use caution when handling this appliance or removing components. Personal injury can occur from sharp metal edges present in all sheet metal constructed equipment.

REQUIREMENTS & CODES

- All electrical wiring must be completed in accordance with local, state & national codes and regulations and with the National Electric Code (ANSI/NFPA 70) or in Canada the Canadian Electric Code Part 1 CSA C.22.1.
- The installer must comply with all local codes and regulations which govern the installation of this type of equipment. Local codes and regulations take precedence over any recommendations contained in these instructions. Consult local building codes and the National Electrical Code (ANSI CI) for special installation requirements.
- Air Ducts must be installed in accordance with the standards of the National Fire Protection Association "Standards for Installation of Air Conditioning and Ventilation Systems" (NFPA 90A), "Standard for Installation of Residence Type Warm Air Heating and Air Conditioning Systems" (NFPA 90B), these instructions, and all applicable local codes.
- Consult Table 2 (page 10), and the rating plate for the proper circulating air flow and temperature rise. It is important that the duct system be designed to provide the correct flow rates and external pressure rise. An improperly designed duct system can result in nuisance shutdowns, and comfort or noise issues.
- This unit is designed for outdoor installations only and should be positioned as described in Locating the Heat Pump.

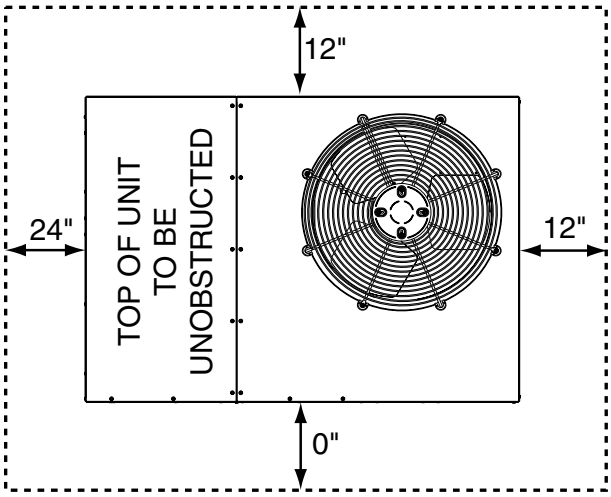

Figure 1. Minimum Unit Clearances

GENERAL INFORMATION

Single packaged heat pumps are ready for easy and immediate installation and can be readily connected into the high static duct system of a home. This unit is completely assembled, wired, and run tested at the factory. **This heat pump is designed for outdoor installation only.** The only connections needed for installation are the supply and return ducts, the line voltage, and thermostat wiring. Use of components other than those specified may invalidate AHRI Certification, Code Agency Listing, and limited warranty on the air conditioner.

Before You Install this Unit

√ The cooling load of the area to be conditioned must be calculated and a system of the proper capacity selected. It is recommended that the area to be conditioned be completely insulated and vapor sealed.

√ Check the electrical supply and verify the power supply is adequate for unit operation. If there is any question concerning the power supply, contact the local power company.

√ All units are securely packed at the time of shipment and upon arrival should be carefully inspected for damage prior to installing the equipment at the job site. Verify coil fins are straight. If necessary, comb fins to remove flattened or bent fins. Claims for damage should be filed immediately with the carrier.

√ Please consult your dealer for maintenance information and availability of maintenance contracts. Please read all instructions before installing the unit.

Locating the Heat Pump

- Survey the job site to determine the best location for mounting the outdoor unit. Select a solid, level position, preferably on a concrete slab, slightly above the grade level, and parallel to the home. If possible, select a site for the unit that is as close as possible to the proposed return grille location. **DO NOT PLACE UNIT UNDER THE HOME.**
- The unit should be located with consideration of minimizing the length of the supply and return ducts with no sharp radius bends. If practical, place the heat pump and its ducts in an area where they will be shaded from the afternoon sun, when the heat load is greatest.
- Consideration should also be given to availability of electric power, service access, noise, and shade.
- Overhead obstructions, poorly ventilated areas, and areas subject to accumulation of debris should be avoided. The hot condenser air must be discharged up and away from the home, and if possible, in a direction with the prevailing wind. Do not place the unit in a confined space. See Figure 8 (page 13) for unit dimensions.
- Sufficient clearance for unobstructed airflow through the outdoor coil must be maintained in order to achieve rated performance. For minimum clearances to obstructions, see Figure 1.

Minimum Clearances
Minimum clearances MUST be maintained from adjacent structures to provide room for proper servicing and air circulation. DO NOT install unit in a confined or recessed area that will allow discharge air from the unit to re-circulate into the condenser air inlet, through the coil. See Figure 1.

Service Access Clearance:
Blower access panel side ..... 24”
Electrical compartment access panel side ..... 12”
Clearance between overhang and top of unit ..... 72”
Clearance around condenser coil area to wall or shrubs (excludes duct panel side)..... 12”

Clearances to Combustibles:
Combustible base - wood or Class A, B, or C roof covering material ..... 0”
Supply & return air ducts ..... 0”
Duct connection side ..... 0”

Air Duct System
Air ducts should be installed in accordance with the standards of the National Fire Protection Association “Standard for Installation of Air Conditioning and Ventilation Systems” (NFPA 90A), “Standard for Installation of Residence Type Warm Air Heating and Air Conditioning Systems” (NFPA 90B), these instructions, and all applicable codes. NFPA publications are available by writing to: National Fire Protection Association, Batterymarch Park, Quincy, ME 02269 or visit www.NFPA.org on the web.

- Design the duct work according to methods described by the Air Conditioning Contractors of America (ACCA).
- The supply duct system (Figure 3, page 6), including the number and type of registers, will have much more effect on the performance of the system than any other factor. The duct must be sufficiently large to conduct an adequate amount of air to each register.
- Duct work should be attached directly to the unit flanges for horizontal applications.
- For highly resistive duct systems it may be necessary to add an additional return air duct and or supply to achieve maximum performance and prevent coil icing and refrigerant flood back.
- **The heat pump system will not cool or heat the home if air is lost to the outside through leaks in the duct system. Ducts that are collapsed or restricted by foreign objects will also prevent adequate air flow.**
- All duct work passing through unconditioned space must be properly insulated to minimize duct losses and prevent condensation. Use insulation with an outer vapor barrier. Refer to local codes for insulation material requirements.

Unconditioned Spaces
All duct work passing through unconditioned space must be properly insulated to minimize duct losses and prevent condensation. Use insulation with an outer vapor barrier. Refer to local codes for insulation material requirements.

The heat pump system will not cool or heat the home if air is lost to the outside through leaks in the duct system. Ducts that are collapsed or restricted by foreign objects will also prevent adequate air flow.

HEAT PUMP INSTALLATION

Unpacking the Unit
It is recommended that the unit be unpacked at the installation site to minimize damage due to handling.

⚠ CAUTION:

Do not tip the unit on its side. Oil may enter the compressor cylinders and cause starting trouble. If unit has been set on its side, restore to upright position and do not run for several hours. Then run unit for a few seconds. Do this three or four times with five minutes between runs.

1. Remove the bands from around the unit.
2. Unfold the top and bottom cap flanges.
3. Carefully remove the top cap and tube.

Installing Return & Supply Air Collars
If the supply and return collars are supplied with the unit, they will be located in the supply duct. They can be easily positioned over the unit openings (Figure 2) and secured with sheet metal screws.

- The diameter of the return duct collar is 14”. **NOTE:** 2 ton units are designed with 12” returns.
- The diameter of the supply duct collar is 12”.
- Before permanently installing the collars, it is recommended you pre-fit them over the openings first to determine best fit and alignment.

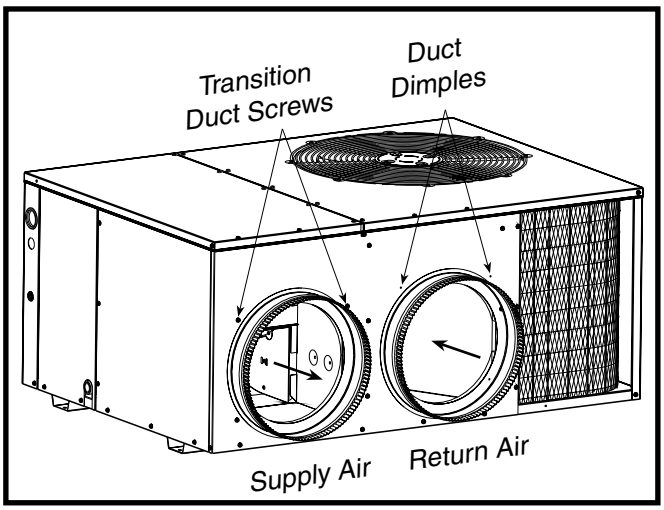

Figure 2. Return & Supply Air Collars

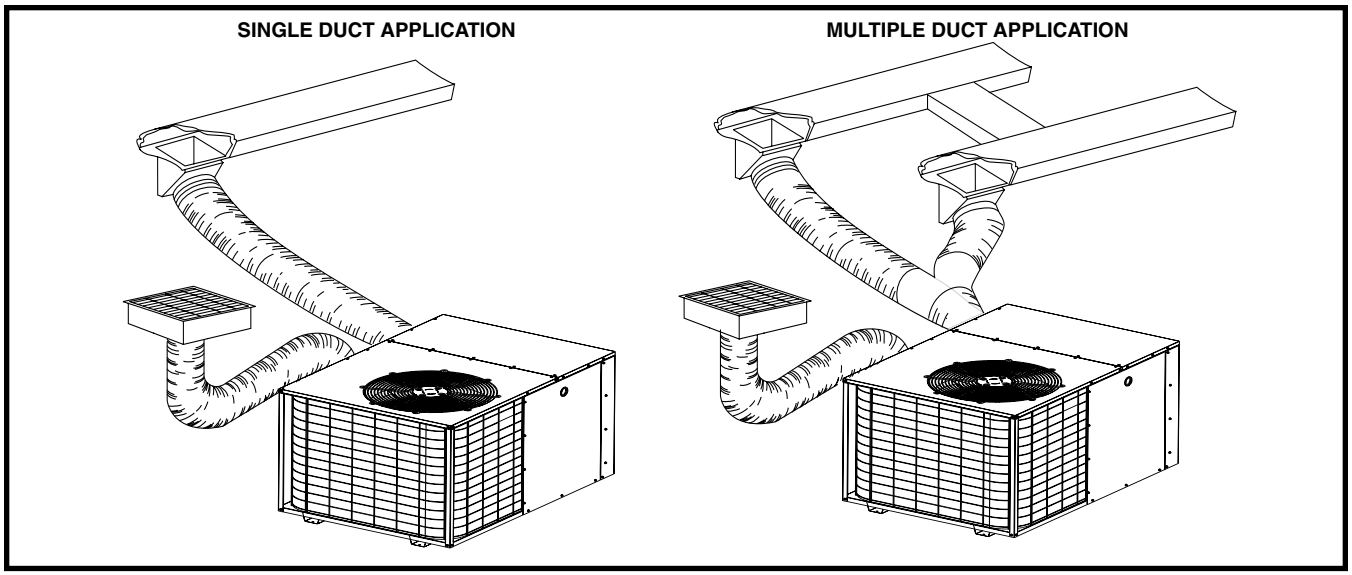

Figure 3. Typical Duct Applications

Supply Duct

1. Assemble the collar by overlapping the two ends. **NOTE:** One end of the collar is slotted and the opposite end has two small holes. Position the end with small screw holes underneath the slotted end.
2. Fasten the collar ends with two self drilling sheet metal screws.
3. Position the collar over the opening and align the 4 holes in the collar with the 4 holes (or dimples depending on model) in the rear panel.
4. Using self-drilling screws (10-16x.5), secure the collar to the rear panel.

Return Duct

1. Assemble the collar by overlapping the two ends. **NOTE:** One end of the collar is slotted and the opposite end has two small holes. Position the end with small screw holes underneath the slotted end.
2. Fasten the collar ends with two self drilling sheet metal screws.
3. Position the collar over the opening. Align the four holes in the collar with the four dimples or holes (depending on unit model) in the panel.
4. Secure the collar to the rear panel using self tapping screws (10-16x.5).

Connecting Return & Supply Air Flexible Ducts

- Flexible ducts may be cut to the required length and spliced with sheet metal sleeves and clamps. **Keep all ducts as short and straight as possible. Avoid sharp bends.** Please follow all instructions packed with duct.
- Flexible ducts can be secured to the corresponding collars with the provided clamps. After the inner duct is connected to the collar, pull the insulation and plastic sleeve over the connection and clamp. **NOTE:** To prevent a loss in cooling capacity, make sure all connections are tight.
- Homes with multiple supply ducts (or special applications), a Y fitting is available for dividing the supply air to different areas of the home for more efficient cooling. **NOTE:** For maximum performance, insulate the Y fitting.

Locating & Installing the Return Air Assembly

To simplify installation, locate and install the return air assembly first. If desired, the return opening can be located inside a closet with louvered doors that has an open area equal to or greater than a 12” x 20” grille. The return air grille can be placed in the wall of a closet and the ducted into the filter box through a boxed-in area at the closet floor level. **Make sure the filter is readily accessible.**

NOTE: The return air box with grille and filter (Figure 4, page 7) should not be located in heavy traffic areas like hallways or center of rooms. A good spot is in a corner or under a table, if a minimum two inch clearance is available.

1. Start the installation from under the home by cutting a small hole in the sub-floor. Determine how the floor joist location will affect cutting the opening needed for the return air box. **NOTE:** Floor joists are generally located on 16” centers, leaving 14-3/8” between joists.
2. After measuring the return air box (approximately 12-1/4” x 20-1/4”), cut the hole through the floor so that the box will fit between the floor joists. Care should be taken when cutting through carpeting to avoid snags. **NOTE:** In most installations it will be necessary to cut a similar hole in the fiberboard directly under the hole in the floor. However, if the floor is more than ten inches deep, it will only be necessary to cut a hole for the collar on the return air box or for the insulated duct.
3. Set the box into the opening and fasten with screws or nails.
4. Install the filter and return air grille in place.

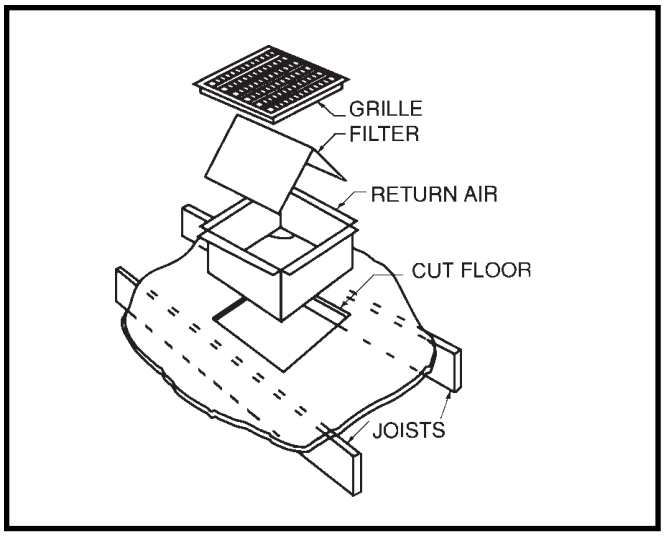

Figure 4. Return Air Box

Locating & Installing the Supply Damper(s)
When locating the supply damper(s), carefully check floor joists and frame members that could interfere with the installation of the damper or flexible duct. Ideally, the damper (Figure 5) should be located in the bottom of the main duct, forward of center of the home, at least three feet from the nearest register. The round supply opening in the slanted side of the damper should face the side of the home where the heat pump is located.

1. Locate the center of the heat duct by cutting a small hole in the fiberboard below the duct at the desired location.
2. Cut a hole approximately 3/4" larger than the damper opening in the fiberboard.
3. Cut a 9-1/8" x 13-1/8" hole in the duct and bend over all tabs flat on the inside of the heat duct.
4. Insert the damper into the duct and bend over all tabs flat on the inside of the heat duct.
5. Seal the opening between the fiberboard and damper or flexible duct.

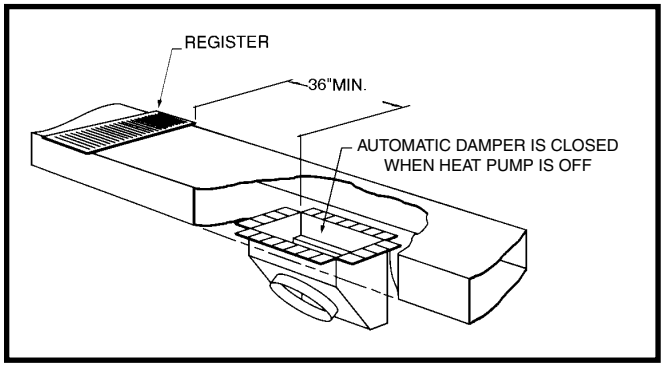

Figure 5. Supply Damper

Condensate Drainage
A 3/4" condensate fitting extends out of the side of the unit as shown in Figure 6. The drain trap, shipped in the electrical compartment, must be installed to prevent water from collecting inside the unit.

1. Thread the elbow provided with the unit into the drain connection until hand tight.
2. Connect the condensate tubing onto the fitting, forming a trap (Figure 6) near the drain connection.
3. Route the condensate tube from the trap to a suitable drain. **NOTE:** For proper drainage, make sure the trap is level to the ground and tubing outlet is below trap level.

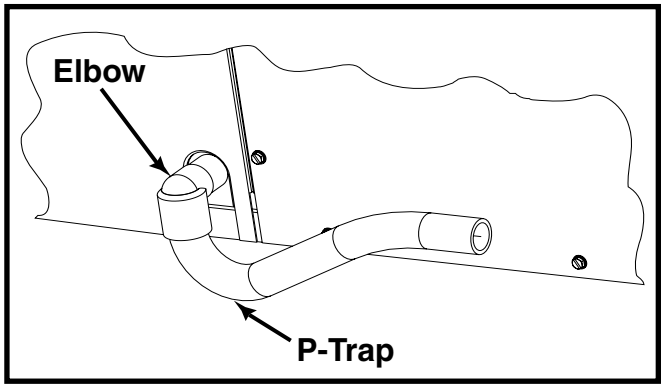

Figure 6. Drain Trap

ELECTRICAL CONNECTIONS

⚠ WARNING:

To avoid electric shock, personal injury, or death, turn off the electric power at the disconnect or the main service panel before making any electrical connections.

- Electrical connections must be in compliance with all applicable local codes and ordinances, and with the current revision of the National Electric Code (ANSI/NFPA 70).
- For Canadian installations the electrical connections and grounding shall comply with the current Canadian Electrical Code (CSA C22.1 and/or local codes).

Pre-Electrical Checklist
√ Verify that the voltage, frequency, and phase of the supply source match the specifications on the unit rating plate.
√ Verify that the service provided by the utility is sufficient to handle the additional load imposed by this equipment. Refer to the unit wiring label for proper high and low voltage wiring.
√ Verify factory wiring is in accordance with the unit wiring diagram (Figures 9 - 11, pages 20 - 22). Inspect for loose connections.

Line Voltage
- It is recommended that the line voltage to the unit be supplied from a dedicated branch circuit containing the correct fuse or circuit breaker for the unit.
- **An electrical disconnect must be located within sight of and readily accessible to the unit.** This switch shall

be capable of electrically de-energizing the outdoor unit. See unit data label for proper incoming field wiring. Any other wiring methods must be acceptable to authority having jurisdiction.

- Provide power supply for the unit in accordance with the unit wiring diagram, and the unit rating plate.
- Connect the line-voltage leads to the terminals on the contactor inside the control compartment. Extend leads through power wiring hole (Figure 7). Connect **L1** & **L2** directly to the contactor.
- Use only copper wire for the line voltage power supply to this unit as listed in Table 1. Use proper code agency listed conduit and a conduit connector for connecting the supply wires to the unit. Use of rain tight conduit is recommended.
- See the unit wiring label for proper high and low voltage wiring. Make all electrical connections in accordance with all applicable codes and ordinances. See Figures 9 - 11 (pages 20 - 22).

⚠ CAUTION:

Label all wires prior to disconnection when servicing controls. Wiring errors can cause improper and dangerous operation. Verify proper operation after servicing.

Supply Wire Length (Feet)				Supply Circuit Ampacity
200	150	100	50	
6	8	10	14	15
4	6	8	12	20
4	6	8	10	25
4	4	6	10	30
3	4	6	8	35
3	4	6	8	40
2	3	4	6	45
2	3	4	6	50
2	3	4	6	55
1	2	3	4	60

Wire Size based on N.E.C. for 60° type copper conductors.

Table 1. Copper Wire Size AWG (1% voltage drop)

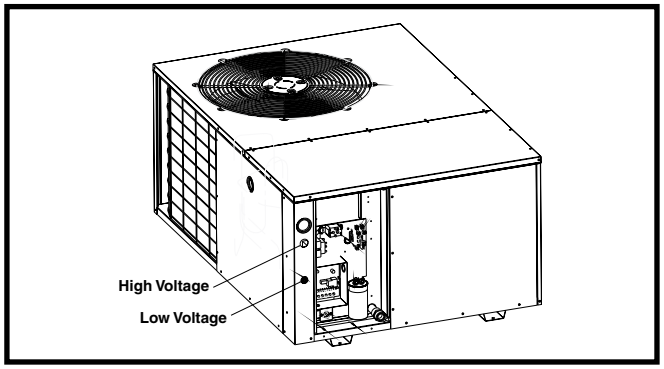

Figure 7. Power Entry

- Units are shipped from the factory wired for 240 volt transformer operation. For 208V operation, remove the lead from the transformer terminal marked 240V and connect it to the terminal marked 208V.

Overcurrent Protection

Overcurrent protection must be provided at the branch circuit distribution panel and sized as shown on the unit rating label and according to applicable local codes. Generally, the best fuse or breaker for any heat pump is the smallest size that will permit the equipment to run under normal usage and provide maximum equipment protection. Properly sized fuses and breakers also prevent nuisance trips during unit startup. **If a fuse blows or a breaker trips, always determine the reason. Do not arbitrarily install a larger fuse or breaker and do not, in any case, exceed the maximum size listed on the data label of the unit.**

Grounding

⚠ WARNING:

The unit cabinet must have an uninterrupted or unbroken electrical ground to minimize personal injury if an electrical fault should occur. Do not use gas piping as an electrical ground!

This unit must be electrically grounded in accordance with local codes or, in the absence of local codes, with the National Electrical Code (ANSI/NFPA 70) or the CSA C22.1 Electrical Code. Use the grounding lug provided in the control box for grounding the unit.

Thermostat Connections

- The heat-cool thermostat is equipped with a system HEAT-COOL switch, which provides a positive means of preventing simultaneous operation of the heating and cooling units. The thermostat is also equipped with an ON-AUTO fan switch which allows the home owner to operate the indoor blower when air circulation is desired.
- Connect the low voltage wires to the respective terminals on the thermostat base (Figure 12, page 23). See thermostat instruction sheet for more detailed wiring information.
- The thermostat should be mounted about 5 feet above the floor on an inside wall. DO NOT install the thermostat on an outside wall or any other location where its operation may be adversely affected by radiant heat from fireplaces, sunlight, or lighting fixtures, and convective heat from warm air registers or electrical appliances. Refer to the thermostat manufacturer's instruction sheet for detailed mounting information.

Defrost Cycle Control

The defrost cycle is initiated via a signal from the defrost sensor on the outdoor coil to the defrost control board inside the control panel. This indicates the coil temperature is low enough to start accumulating frost. The board has interval settings of 30, 60, and 90 minutes. These time intervals

represent the time elapsed before defrosting cycle starts and they are dependent on the climate conditions of the installation. A 30 minute setting would be recommended in a moist climate such as Seattle Washington. A 90 minute setting would be adequate in a dry climate such as southern Arizona. The factory time interval setting is 30 minutes.

Defrost Control Board

Operational Information

- Terminals **R** - **C** must have 24V present between them for the time delay and defrost sequences to be operational.
- ***Defrost Thermostat (DFT) By-Pass -*** Jumping the **T2** & **DFT** test pins will communicate to the board that the defrost thermostat is closed (if the compressor is running). The defrost T-stat tells the board whether a defrost cycle needs to be started or terminated.

  NOTE: The defrost T-stat is closed at 30° F or below and is open at 68° F or above, but its state is unknown if the temperature is between 30° F and 68° F.

- With the DFT closed, the unit will run for 30/60/90 minutes in heat mode and then defrost the outdoor coil. The defrost will turn off the outdoor fan, energize the reversing valve, and turn on the compressor raising the coil temperature to 68° F. This will open the DFT and terminate the defrost. If the DFT does not open, the defrost will end after 10 minutes.
- ***Defrost Board Speed Up -*** Jumping the **TEST** terminal to the **C** (common) terminal (while the compressor is in heat mode) will over-ride the defrost board and initiate a faster defrost test in 5, 10 or 15 seconds as determined by the 30, 60 or 90 minute defrost pin settings (factory setting is 30 minutes).
  - The compressor off delay is also bypassed when the unit goes into defrost test. If unit is kept in defrost test, the delay will be bypassed when the test is terminated by the processor.

  NOTE: If the jumper is removed before the test is over, the processor will perform the remainder of a normal defrost as noted above.

- The delay/no-delay pin affects compressor operation during defrosts. The default setting is delay. To switch from delay to no-delay, remove the pin from the **delay** pin location and move it to the **no-delay** pin location.
  - Scroll compressors that have noise issues while going into or coming out of defrost should use this 30 second delay to reduce the defrost noise.

Normal Mode

To test normal defrost operation when the temperature is above 35° F, jumper **R** to **DFT** on the board and allow the unit to run for 30 minutes. Defrost will continue until the **R** to **DFT** jumper is removed or for 10 minutes. Remove the jumper.

The 5 minute time delay feature can be shortened 1 time to 1 second by jumping the **Test** to **C** terminal. Remove the jumper and repeat as desired. **NOTE:** If jumper is left on the **Test** to **common** pins permanently, the defrost cycle will be inoperable.

Speed Up Mode (Testing Procedure)

1. Jumper **T2** to **DFT** at the test terminals.
2. With unit running in heat mode, jump the **TEST** terminal to the **C** (common) terminal near it. The board will speed up and enter defrost mode in 5/10/15 seconds, depending on the defrost time selection. Compressor delay will not function during speed-up. **NOTE:** Manually initiating a defrost will cause the compressor to run continually when entering defrost.
3. This test will end in 5 seconds if the **TEST** - common short is not removed.
4. Remove both the short and the **T2** to **DFT** jumper to terminate the defrost cycle. The 30 second compressor delay should operate normally.
5. Test is complete, reset thermostat to the equipment owner's preference.

Electric Heat Package (optional)

This heat pump is shipped without an auxiliary electric heat kit installed. If electric heat is desired, an accessory heater kit must be field installed. Refer to Table 2 (page 10) for blower speeds.

- Select the correct size heat package for the installation. See specifications sheet for available kits and application. Install the heater kit according to the to the installation instructions provided with the kit.
- Installation is most easily accomplished before making duct or electrical connections.

Outdoor Thermostat (Factory Option)

The outdoor thermostat prevents the electrical auxillary heat (if used) from operating above a desired set point. The factory temperature setting is 40° F.

Blower Speed
For optimum system performance and comfort, it may be necessary to change the factory speed setting. See Table 2 for factory settings.

⚠ WARNING:

To avoid electric shock, personal injury, or death, turn off the electric power at the disconnect or the main service panel before making any electrical connections.

⚠ CAUTION:

Label all wires prior to disconnection when servicing controls. Wiring errors can cause improper and dangerous operation. Verify proper operation after servicing.

⚠ CAUTION:

To avoid personal injury or property damage, make certain that the motor leads cannot come into contact with any metal components of the unit.

1. Disconnect all electrical power to the unit and remove the service panel.
2. Verify the required speed from the airflow data found in Table 2. Place appropriate wire on the appropriate motor speed tap for the required airflow.
3. Check all factory wiring per the unit wiring diagram and inspect the factory wiring connections make sure no wires loosened during shipping or installation.

MODEL NUMBER	MOTOR TAP	EXTERNAL STATIC PRESSURE DROP (IN WC)							
		0.1	0.2	0.3	0.4	0.5	0.6	0.7	0.8
024K	T1*	888	843	800	744	689	640	573	522
	T2	1139	1101	1060	1017	964	919	865	811
	T3**	1279	1235	1197	1162	1115	1073	1021	977
	T4	1385	1347	1313	1275	1234	1196	1153	1106
	T5	1567	1531	1500	1467	1427	1394	1362	1325
030K	T1	888	843	800	744	689	640	573	522
	T2*	1139	1101	1060	1017	964	919	865	811
	T3**	1279	1235	1197	1162	1115	1073	1021	977
	T4	1385	1347	1313	1275	1234	1196	1153	1106
	T5	1567	1531	1500	1467	1427	1394	1362	1325
036K	T1	1139	1101	1060	1017	964	919	865	811
	T2	1279	1235	1197	1162	1115	1073	1021	977
	T3*	1399	1353	1324	1281	1247	1211	1167	1115
	T4**	1474	1430	1392	1360	1318	1289	1247	1197
	T5	1623	1585	1529	1519	1460	1447	1407	1364
042K	T1	1326	1290	1251	1204	1167	1116	1083	1024
	T2**	1430	1383	1345	1305	1257	1211	1174	1114
	T3*	1562	1521	1479	1447	1400	1359	1311	1265
	T4	1658	1598	1578	1537	1487	1458	1413	1368
	T5	1774	1728	1684	1647	1617	1594	1552	1509
048K	T1**	1430	1383	1345	1305	1257	1211	1174	1114
	T2	1562	1521	1479	1447	1400	1359	1311	1265
	T3*	1658	1598	1578	1537	1487	1458	1413	1368
	T4	1774	1728	1684	1647	1617	1594	1552	1509
	T5	1951	1908	1883	1851	1823	1786	1750	1717
060K	T1	1140	1094	1051	1005	954	901	850	802
	T2	1375	1340	1310	1252	1235	1172	1160	1108
	T3*	1691	1659	1623	1586	1544	1504	1468	1424
	T4**	1722	1692	1653	1615	1579	1539	1498	1454
	T5	1841	1804	1771	1731	1703	1659	1614	1578

NOTES:
* Denotes Air Flow Setting for cooling & heating
** Denotes Air Flow setting for electric heating (10 KW)
Airflow performance is with a dry coil.

Table 2. Airflow Data

STARTUP & ADJUSTMENTS

Pre-Start Checklist

The following check list should be observed prior to starting the unit.

√ Is the unit level? Unit should be level or slightly slanted toward the drain for proper condensate drainage.

√ Is the unit installed with the proper clearances as listed on pages 4 & 5?

√ Is the wiring correct according to the wiring diagram and electrical codes?

√ Are all the wiring connections tight? Check the condenser fan to make sure it turns freely.

√ Is the overcurrent protection properly sized?

√ Is the thermostat wired correctly? Is it installed in a proper location?

√ To achieve rated capacity and efficiency the compressor must be exposed to refrigerant for at least 24 hours prior to running and then must be run for a minimum of 12 hours.

Start-Up Procedure

The control circuit consists of an anti-short cycle timer that will not let the compressor re-start before 5 minutes have elapsed.

1. Set the system mode to OFF and the temperature mode to its highest setting.
2. Turn power on at the disconnect switch.
3. Set the system mode to ON or COOL.
4. Set the temperature mode below room temperature. Verify that the indoor blower, outdoor fan, and compressor energize and the cooling function starts.
5. Verify the discharge air grilles are adjusted and the system air is balanced.
6. Verify the duct work has no air leaks.
7. Verify the condensate drain is installed correctly and functions properly.
8. Set the temperature mode above room temperature. The unit should stop.
9. Instruct the homeowner on unit and thermostat operation and filter servicing.

Air Circulation

Leave the thermostat system mode on OFF, and set the fan mode to ON. Blower should run continuously. Check the air delivery at the supply registers and adjust register openings for balanced air distribution. Examine ducts for leaks or obstruction if insufficient air is detected.

Set the thermostat fan mode to AUTO. The blower should stop running.

System Heating

Set the thermostat system mode to HEAT and the fan mode to AUTO. Change the thermostat temperature selector above the existing room temperature and check for the discharge of warm air at the supply registers.

System Cooling

Set the thermostat's system mode to COOL and the fan mode to AUTO. Change the thermostat temperature selector below the existing room temperature. Allow the cooling system to operate for several minutes and check for the discharge of cool air at the supply registers.

Short Cycle Protection

The control circuit is equipped with a time-delay feature for protection against short cycling. With the system operating in the cooling mode, gradually raise the thermostat temperature setting until the whole system de-energizes. Immediately lower the thermostat temperature to the original setting and verify that the indoor blower is energized. After approximately 5 minutes the compressor and the outdoor fan will energize.

Emergency Heat

(Available only when Electric heat is supplied) Set the thermostat's system mode to EM HT and the fan mode to either AUTO (intermittent air) or to ON (continuous air). Change the thermostat's temperature selector above the existing room temperature and check the following:

1. The thermostat auxiliary heat light (RED) should be on.
2. The heat pump compressor and the fan should not run; low voltage circuit remains energized.
3. The blower will run according to the thermostat's fan mode setting.

Anti Short Cycle Timer Test

The 5 minute time delay feature can be bypassed by shorting the TEST pins together.

Heating Mode

When the TEST pins are shorted together for more than 1 second, the control will switch between defrost mode and heating mode.

Cooling Mode

When the TEST pins are shorted together for more than 1 second, the Anti Short Cycle Timer will be bypassed.

Adjustment of Refrigerant Charge

⚠ CAUTION:

This heat pump contains liquid and gaseous refrigerant under pressure. Adjustment of refrigerant charge should only be attempted by qualified, trained personnel thoroughly familiar with the equipment and safe responsible refrigerant handling procedures. Under no circumstances should the homeowner attempt to install and/or service this equipment. Failure to comply with this warning could result in equipment damage, personal injury, or death.

Charging the Unit in AC Mode with Outdoor Temperatures Above 65° F

1. With the system operating at steady-state, measure the suction and liquid refrigerant pressures (in psig) at the service valves.
2. Measure the compressor discharge temperature (° F).
3. Use the cooling charging tables (Tables 3–8 pages 14–16) to verify system conditions for proper charge amount.

Charging the Unit in Heating Mode

1. Evacuate the refrigerant system.
2. Weigh in the proper charge as shown on the unit rating plate. Use the charging tables for heating mode of operation as a guide (Tables 9 - 14, pages 17 - 19). Unit charge MUST be verified in cooling season.
3. Verify the unit is operating properly according to the System Heating section on page 11.

Safety Switches

- The low pressure switch (if equipped) is factory installed and located in the suction line internal to the unit. The switch is designed to protect the compressor if a loss of charge occurs. Under normal conditions, the switch is closed.

  If the suction pressure falls below 5 psig, then the switch will open and de-energize the unit. The switch will close again once the suction pressure increases above 20 psig. The low pressure switch interrupts the thermostat inputs to the unit. **NOTE:** When the switch opens and then closes, there will be a 5 minute short cycling delay before the unit can energize.

- The high pressure switch is factory installed and located in the compressor discharge line internal to the unit. The switch is designed to de-energize the system when very high pressures occur during abnormal conditions. Under normal conditions, the switch is closed.

If the discharge pressure rises above 650 psig, the switch will open and de-energize the unit. The switch will close again once the discharge pressure decreases to 460 psig. The high pressure switch interrupts the thermostat inputs to the unit. **NOTE:** When the switch opens and then closes, there will be a 5 minute short cycling delay before the unit can energize.

UNIT MAINTENANCE

⚠ WARNING:

To prevent electrical shock, personal injury, or death, disconnect all electrical power to the unit before performing any maintenance or service. The unit may have more than one electrical supply.

Proper maintenance is important to achieve optimum performance from the heat pump. The ability to properly perform maintenance on this equipment requires certain mechanical skills and tools. If you do not possess these skills, contact your dealer for maintenance. Consult your local dealer about the availability of maintenance contracts. Routine maintenance should include the following:

- Inspect and clean or replace air filters at the beginning of each heating and cooling season, or more frequently if required.
- Inspect the condensate drain and outdoor coil at the beginning of each cooling season. Remove any debris. Clean the outdoor coil and louvers as necessary using a mild detergent and water. Rinse thoroughly with water.
- Inspect the electrical connections for tightness at the beginning of each heating and cooling season. Service as necessary.

⚠ CAUTION:

The unit should never be operated without a filter in the return air system. Replace disposable filters with the same type and size.

- Do not attempt to add additional oil to motors unequipped with oil tubes. The compressor is hermetically sealed at the factory and does not require lubrication.

FIGURES & TABLES

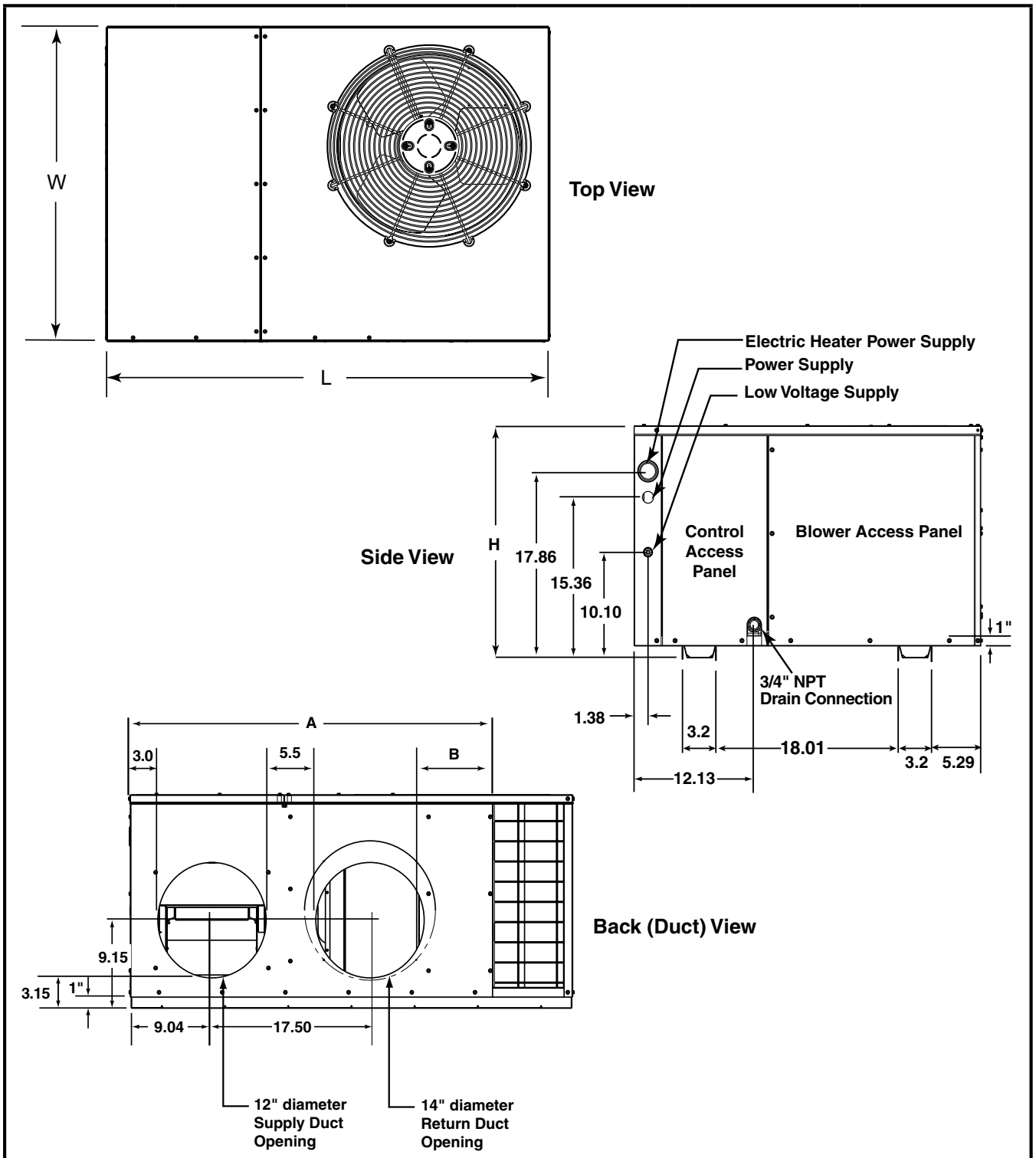

Model Number	Length (L)	Width (W)	Height (H)	A	B
024K	49	35	30.2	40.15	7.61
030K	49	35	30.2	40.15	7.61
036K	49	35	30.2	35.02	2.48
042K	49	35	30.2	35.02	2.48
048K	49	35	34.2	35.02	2.48
060K	49	35	38.2	35.02	2.48

Figure 8. Physical Data & Unit Dimensions

REFRIGERANT CHARGING TABLES - COOLING MODE

Shaded boxes indicate flooded conditions.

Rated design values are based on rated indoor air flow and 80 °F entering dry bulb.

1. Suction pressure will vary according to variations in indoor conditions.
2 All pressures are listed psig and all temperatures in °F
3. Discharge temperatures greater than charted values indicate an undercharged system.

2 TON MODELS																
Suct. Press.	OUTDOOR TEMPERATURE (° F)															
	70		75		80		85		90		95		100		105	
	Liq. Press.	Dis. Temp.	Liq. Press.	Dis. Temp.	Liq. Press.	Dis. Temp.	Liq. Press.	Dis. Temp.	Liq. Press.	Dis. Temp.	Liq. Press.	Dis. Temp.	Liq. Press.	Dis. Temp.	Liq. Press.	Dis. Temp.
133																
135	251	140														
137	253	151	273	137												
139	254	163	276	147	295	134										
141	252	197	278	157	298	143	315	135	332	131						
143	253	214	277	182	298	158	319	141	335	138	351	132				
145			278	196	300	172	320	151	339	146	355	138	370	133		
147					301	185	322	164	342	154	359	145	375	139	389	136
149							324	178	344	163	363	150	379	145	394	141
151									346	173	366	160	385	149	398	147
153											368	170	387	158	406	148
155													390	168	408	157
157															411	166
159																

Table 3. Charging Table for 2 Ton Models (024K)

2.5 TON MODELS																
Suct. Press.	OUTDOOR TEMPERATURE (° F)															
	70		75		80		85		90		95		100		105	
	Liq. Press.	Dis. Temp.	Liq. Press.	Dis. Temp.	Liq. Press.	Dis. Temp.	Liq. Press.	Dis. Temp.	Liq. Press.	Dis. Temp.	Liq. Press.	Dis. Temp.	Liq. Press.	Dis. Temp.	Liq. Press.	Dis. Temp.
137																
139	252	127														
141	254	138	274	129												
143	255	150	277	139	296	131										
145	255	173	279	149	299	140	318	135	336	133						
147	255	190	279	168	301	150	321	141	339	140	357	136				
149			280	182	303	164	324	148	343	148	361	142	378	138		
151					304	177	326	160	347	155	365	149	382	144	399	142
153							328	175	349	163	370	154	387	151	404	148
155									351	174	372	164	392	155	408	154
157											374	173	395	164	415	157
159													397	174	417	166
161															420	175
163																

Table 4. Charging Table for 2.5 Ton Models (030K)

REFRIGERANT CHARGING TABLES - COOLING MODE

Shaded boxes indicate flooded conditions.

Rated design values are based on rated indoor air flow and 80 °F entering dry bulb.

1. Suction pressure will vary according to variations in indoor conditions.
2 All pressures are listed psig and all temperatures in °F
3. Discharge temperatures greater than charted values indicate an undercharged system.

3 TON MODELS																
Suct. Press.	OUTDOOR TEMPERATURE (° F)															
	70		75		80		85		90		95		100		105	
	Liq. Press.	Dis. Temp.	Liq. Press.	Dis. Temp.	Liq. Press.	Dis. Temp.	Liq. Press.	Dis. Temp.	Liq. Press.	Dis. Temp.	Liq. Press.	Dis. Temp.	Liq. Press.	Dis. Temp.	Liq. Press.	Dis. Temp.
132																
134	265	116														
136	266	127	286	122												
138	268	138	288	132	308	128										
140	268	155	291	142	311	136	330	134	348	135						
142	269	172	292	156	314	144	333	140	352	142	370	140				
144			293	171	315	157	337	146	356	150	374	146	392	144		
146					317	171	339	158	360	156	378	153	396	151	414	150
148							340	173	362	164	383	158	401	157	418	156
150									364	175	385	168	406	162	423	161
152											387	177	408	171	429	166
154													410	180	431	175
156															434	184
158																

Table 5. Charging Table for 3 Ton Models (036K)

3.5 TON MODELS																
Suct. Press.	OUTDOOR TEMPERATURE (° F)															
	70		75		80		85		90		95		100		105	
	Liq. Press.	Dis. Temp.	Liq. Press.	Dis. Temp.	Liq. Press.	Dis. Temp.	Liq. Press.	Dis. Temp.	Liq. Press.	Dis. Temp.	Liq. Press.	Dis. Temp.	Liq. Press.	Dis. Temp.	Liq. Press.	Dis. Temp.
134	269	129														
136	271	135	293	134												
138	274	140	295	139	316	138										
140	279	139	297	144	318	143	340	143								
142	282	142	302	145	320	148	342	148	363	148						
144			305	148	325	150	344	152	365	152	387	153				
146					328	154	348	155	367	156	389	157	410	157		
148							351	159	371	160	391	161	412	161	434	162
150							355	163	374	164	394	165	414	165	436	166
152									378	168	398	169	417	170	438	170
154											401	173	421	174	440	174
156													424	178	444	179
158															447	183
160																

Table 6. Charging Table for 3.5 Ton Models (042K)

REFRIGERANT CHARGING TABLES - COOLING MODE

Shaded boxes indicate flooded conditions.

Rated design values are based on rated indoor air flow and 80 °F entering dry bulb.

1. Suction pressure will vary according to variations in indoor conditions.
2 All pressures are listed psig and all temperatures in °F
3. Discharge temperatures greater than charted values indicate an undercharged system.

4 TON MODELS (WITH RESTRICTOR)																
Suct. Press.	OUTDOOR TEMPERATURE (° F)															
	70		75		80		85		90		95		100		105	
	Liq. Press.	Dis. Temp.	Liq. Press.	Dis. Temp.	Liq. Press.	Dis. Temp.	Liq. Press.	Dis. Temp.	Liq. Press.	Dis. Temp.	Liq. Press.	Dis. Temp.	Liq. Press.	Dis. Temp.	Liq. Press.	Dis. Temp.
133	280	143														
135	282	149	305	147												
137	285	154	307	152	330	151										
139	290	153	309	157	332	156	355	155								
141	293	156	314	158	334	160	357	159	380	158						
143			318	161	339	163	359	164	382	163	405	163				
145					342	166	363	167	384	167	407	167	430	167		
147							367	170	388	171	409	171	432	171	455	171
149							370	174	391	175	412	175	434	175	457	175
151									395	179	416	179	437	179	459	178
153											419	183	440	183	461	183
155													444	187	465	187
157															468	191
159																

Table 7. Charging Table for 4 Ton Models (048K)

5 TON MODELS																
Suc. Press.	OUTDOOR TEMPERATURE (° F)															
	70		75		80		85		90		95		100		105	
	Liq. Press.	Dis. Temp.	Liq. Press.	Dis. Temp.	Liq. Press.	Dis. Temp.	Liq. Press.	Dis. Temp.	Liq. Press.	Dis. Temp.	Liq. Press.	Dis. Temp.	Liq. Press.	Dis. Temp.	Liq. Press.	Dis. Temp.
124																
126	274	101														
128	276	112	295	111												
130	277	124	298	121	318	119										
132	279	129	300	131	320	128	340	128	360	130						
134	280	146	303	136	326	128	344	134	363	137	383	136				
136			304	150	327	141	350	133	367	145	387	142	406	141		
138					329	155	352	145	374	145	391	149	410	148	430	148
140							354	159	376	153	398	148	415	154	434	153
142									378	164	401	158	423	153	439	159
144											403	168	425	163	447	158
146													428	172	450	167
148															452	176
150																

Table 8. Charging Table for 5 Ton Models (060K)

REFRIGERANT CHARGING TABLES - HEATING MODE

Shaded boxes indicate flooded conditions.

Rated design values are based on 70 °F indoor air temperature .

1. All pressures are listed psig and all temperatures in °F
2. Discharge temperatures greater than values listed indicate an undercharged system.
3. Charging tables should only be used as a guide.
4. Unit charge must be verified in cooling season.

2 TON MODELS																				
OUTDOOR TEMPERATURE (° F)																				
0			10			20			30			40			50			60		
Suc. Press	Liq. Press.	Dis. Temp.	Suc. Press.	Liq. Press.	Dis. Temp.	Suc. Press.	Liq. Press.	Dis. Temp.	Suc. Press.	Liq. Press.	Dis. Temp.	Suc. Press.	Liq. Press.	Dis. Temp.	Suc. Press.	Liq. Press.	Dis. Temp.	Suc. Press.	Liq. Press.	Dis. Temp.
35	198	77	50	227	92	64	256	107	79	284	122	94	307	136	111	347	150	127	387	165
36	205	75	51	233	90	65	260	105	80	288	120	95	314	133	112	354	146	128	394	158
37	212	73	52	239	88	66	265	103	81	292	118	96	321	130	113	361	141	129	401	152
38	219	71	53	245	86	67	270	101	82	295	116	97	328	128	114	368	137	130	408	146
39	226	69	54	250	84	68	275	99	83	299	114	98	335	125	115	375	132	131	415	140
40	233	67	55	256	82	69	279	97	84	303	112	99	342	122	116	382	128	132	422	134
41	240	65	56	262	80	70	284	95	85	306	110	100	349	119	117	389	123	133	429	128

Table 9. Charging Table for 2 Ton Models (024K)

2.5 TON MODELS																				
OUTDOOR TEMPERATURE (° F)																				
0			10			20			30			40			50			60		
Suc. Press	Liq. Press.	Dis. Temp.	Suc. Press.	Liq. Press.	Dis. Temp.	Suc. Press.	Liq. Press.	Dis. Temp.	Suc. Press.	Liq. Press.	Dis. Temp.	Suc. Press.	Liq. Press.	Dis. Temp.	Suc. Press.	Liq. Press.	Dis. Temp.	Suc. Press.	Liq. Press.	Dis. Temp.
34	195	82	49	223	98	64	252	114	79	280	130	93	295	145	107	318	159	121	341	173
35	202	80	50	229	96	65	257	112	80	284	128	94	302	143	108	325	155	122	348	167
36	209	78	51	235	94	66	261	110	81	288	126	95	309	140	109	332	150	123	355	161
37	216	76	52	241	92	67	266	108	82	291	124	96	316	137	110	339	146	124	362	154
38	223	74	53	247	90	68	271	106	83	295	122	97	323	134	111	346	141	125	369	148
39	230	72	54	253	88	69	276	104	84	299	120	98	330	131	112	353	137	126	376	142
40	237	70	55	259	86	70	280	102	85	302	118	99	337	128	113	360	132	127	383	136

Table 10. Charging Table for 2.5 Ton Models (030K)

REFRIGERANT CHARGING TABLES - HEATING MODE

Shaded boxes indicate flooded conditions.

Rated design values are based on 70 °F indoor air temperature .

1. All pressures are listed psig and all temperatures in °F
2. Discharge temperatures greater than values listed indicate an undercharged system.
3. Charging tables should only be used as a guide.
4. Unit charge must be verified in cooling season.

3 TON MODELS																				
OUTDOOR TEMPERATURE (° F)																				
0			10			20			30			40			50			60		
Suc. Press	Liq. Press.	Dis. Temp.	Suc. Press.	Liq. Press.	Dis. Temp.	Suc. Press.	Liq. Press.	Dis. Temp.	Suc. Press.	Liq. Press.	Dis. Temp.	Suc. Press.	Liq. Press.	Dis. Temp.	Suc. Press.	Liq. Press.	Dis. Temp.	Suc. Press.	Liq. Press.	Dis. Temp.
37	213	93	49	232	99	62	251	105	74	270	111	90	282	122	109	312	138	127	341	154
38	220	91	50	238	97	63	256	103	75	274	109	91	289	120	110	319	134	128	348	148
39	227	89	51	244	95	64	260	101	76	277	107	92	296	117	111	326	129	129	355	142
40	234	87	52	250	93	65	265	99	77	281	105	93	303	114	112	333	125	130	362	136
41	241	85	53	255	91	66	270	97	78	285	103	94	310	111	113	340	120	131	369	130
42	248	83	54	261	89	67	275	95	79	288	101	95	317	108	114	347	116	132	376	123
43	255	81	55	267	87	68	280	93	80	292	99	96	324	105	115	354	111	133	383	117

Table 11. Charging Table for 3 Ton Models (036K)

3.5 TON MODELS																				
OUTDOOR TEMPERATURE (°. F)																				
0			10			20			30			40			50			60		
Suc. Press	Liq. Press.	Dis. Temp.	Suc. Press.	Liq. Press.	Dis. Temp.	Suc. Press.	Liq. Press.	Dis. Temp.	Suc. Press.	Liq. Press.	Dis. Temp.	Suc. Press.	Liq. Press.	Dis. Temp.	Suc. Press.	Liq. Press.	Dis. Temp.	Suc. Press.	Liq. Press.	Dis. Temp.
33	217	136	48	239	137	63	261	138	78	283	139	92	295	144	107	319	154	121	343	163
34	224	134	49	245	135	64	266	136	79	287	137	93	302	141	108	326	149	122	350	157
35	231	132	50	251	133	65	271	134	80	290	135	94	309	139	109	333	145	123	357	151
36	238	130	51	257	131	66	275	132	81	294	133	95	316	136	110	340	140	124	364	145
37	245	128	52	262	129	67	280	130	82	298	131	96	323	133	111	347	136	125	371	139
38	252	126	53	268	127	68	285	128	83	301	129	97	330	130	112	354	131	126	378	133
39	259	124	54	274	125	69	290	126	84	305	127	98	337	127	113	361	127	127	385	126

Table 12. Charging Table for 3.5 Ton Models (042K)

REFRIGERANT CHARGING TABLES - HEATING MODE

Shaded boxes indicate flooded conditions.

Rated design values are based on 70 °F indoor air temperature .

1. All pressures are listed psig and all temperatures in °F
2. Discharge temperatures greater than values listed indicate an undercharged system.
3. Charging tables should only be used as a guide.
4. Unit charge must be verified in cooling season.

4 TON MODELS																				
OUTDOOR TEMPERATURE (° F)																				
0			10			20			30			40			50			60		
Suc. Press	Liq. Press.	Dis. Temp.	Suc. Press.	Liq. Press.	Dis. Temp.	Suc. Press.	Liq. Press.	Dis. Temp.	Suc. Press.	Liq. Press.	Dis. Temp.	Suc. Press.	Liq. Press.	Dis. Temp.	Suc. Press.	Liq. Press.	Dis. Temp.	Suc. Press.	Liq. Press.	Dis. Temp.
33	218	127	46	236	129	59	254	131	72	272	133	87	285	139	105	315	148	122	346	158
34	225	125	47	242	127	60	259	129	73	276	131	88	292	136	106	322	144	123	353	151
35	232	123	48	248	125	61	264	127	74	279	129	89	299	133	107	329	139	124	360	145
36	239	121	49	254	123	62	268	125	75	283	127	90	306	131	108	336	135	125	367	139
37	246	119	50	259	121	63	273	123	76	287	125	91	313	128	109	343	130	126	374	133
38	253	117	51	265	119	64	278	121	77	290	123	92	320	125	110	350	126	127	381	127
39	260	115	52	271	117	65	283	119	78	294	121	93	327	122	111	357	121	128	388	121

Table 13. Charging Table for 4 Ton Models (048K)

5 TON MODELS																				
OUTDOOR TEMPERATURE (° F)																				
0			10			20			30			40			50			60		
Suc. Press	Liq. Press.	Dis. Temp.	Suc. Press.	Liq. Press.	Dis. Temp.	Suc. Press.	Liq. Press.	Dis. Temp.	Suc. Press.	Liq. Press.	Dis. Temp.	Suc. Press.	Liq. Press.	Dis. Temp.	Suc. Press.	Liq. Press.	Dis. Temp.	Suc. Press.	Liq. Press.	Dis. Temp.
31	203	134	44	233	139	57	264	143	70	294	148	84	313	162	100	344	186	116	375	210
32	210	132	45	239	137	58	269	141	71	298	146	85	320	159	101	351	182	117	382	204
33	217	130	46	245	135	59	273	139	72	302	144	86	327	156	102	358	177	118	389	198
34	224	128	47	251	133	60	278	137	73	305	142	87	334	154	103	365	173	119	396	192
35	231	126	48	257	131	61	283	135	74	309	140	88	341	151	104	372	168	120	403	186
36	238	124	49	263	129	62	288	133	75	313	138	89	348	148	105	379	164	121	410	180
37	245	122	50	269	127	63	293	131	76	316	136	90	355	145	106	386	159	122	417	173

Table 14. Charging Table for 5 Ton Models (060K)

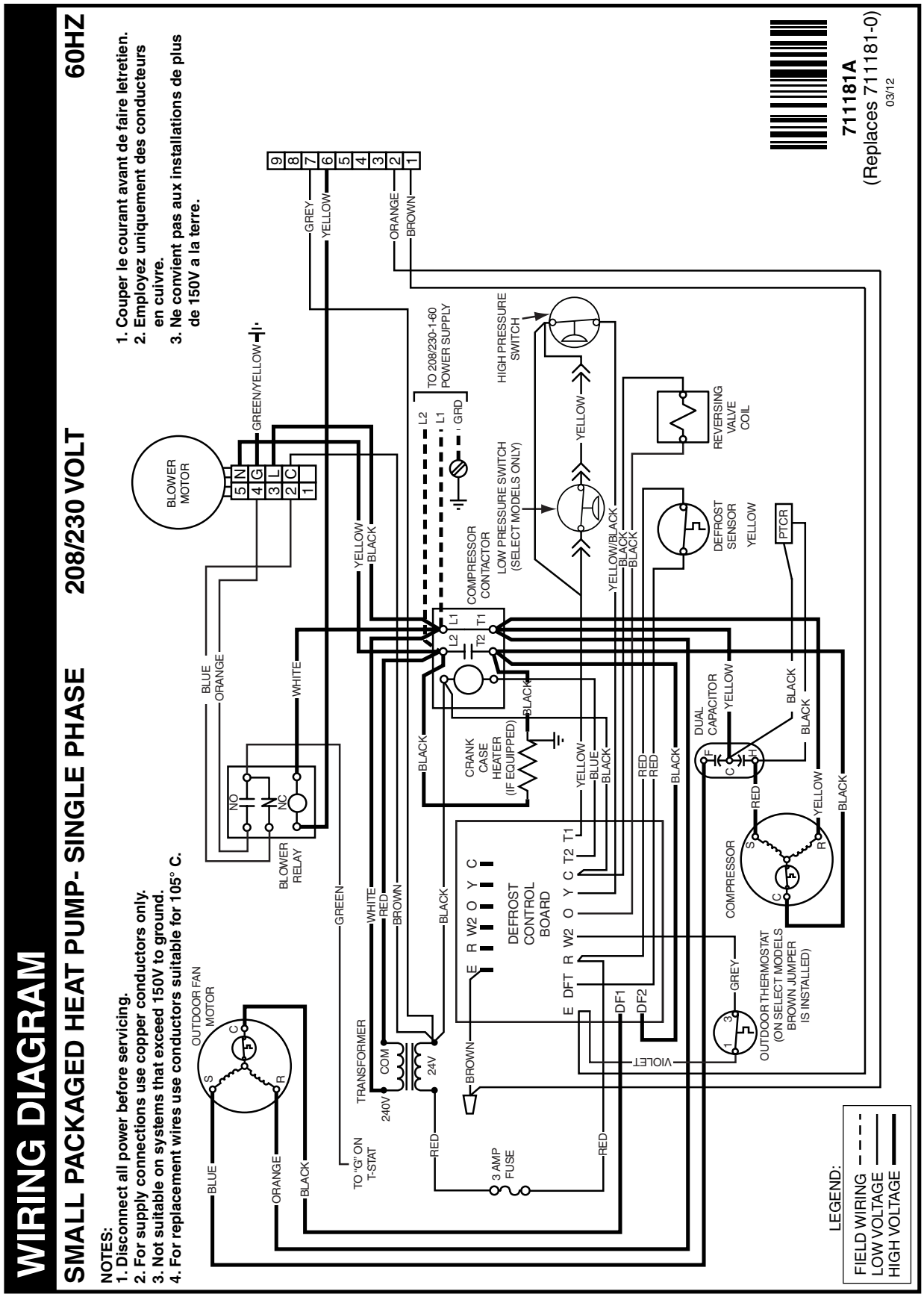

Figure 9. Wiring Diagram - 2 & 2.5 Ton Models

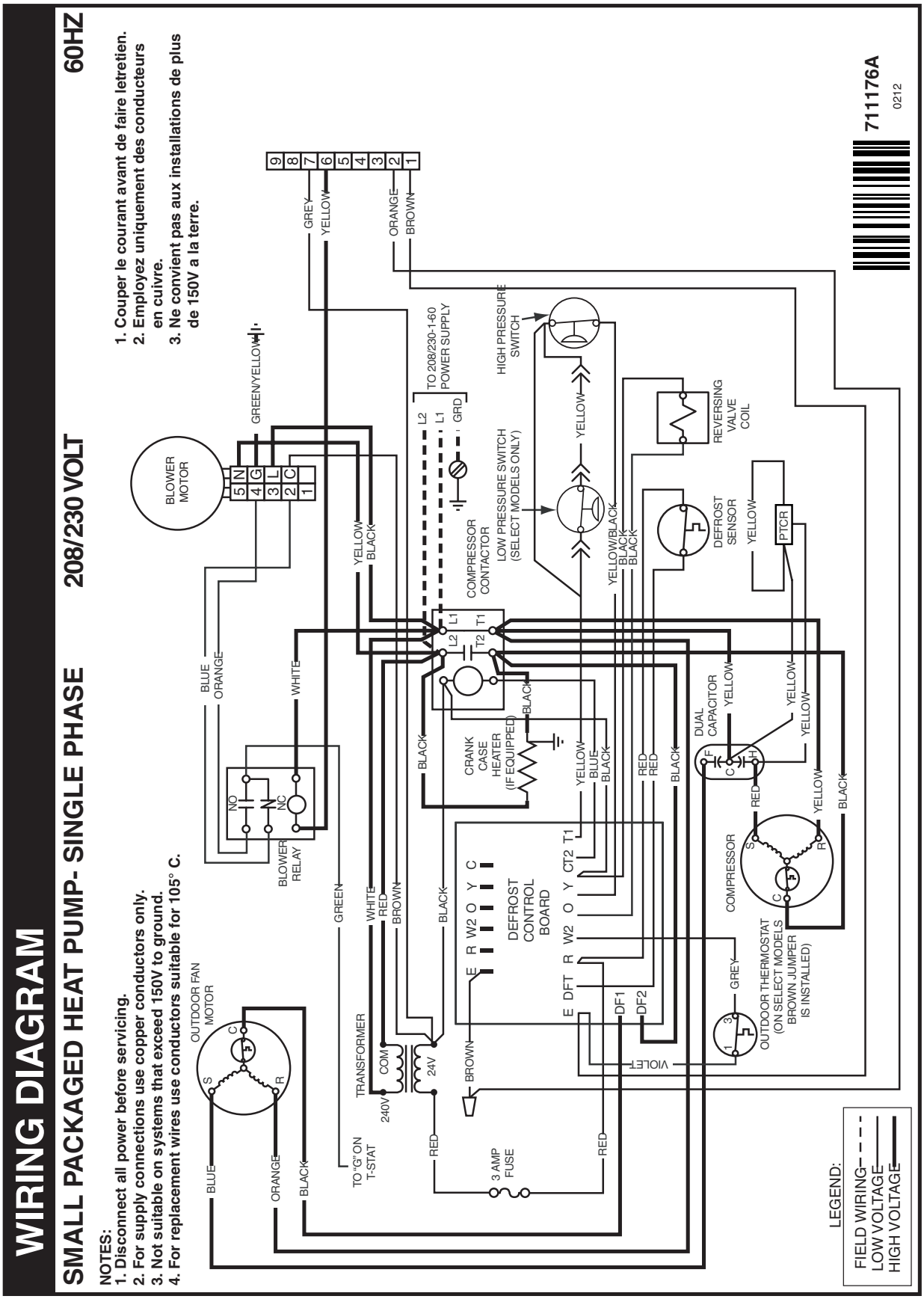

Figure 10. Wiring Diagram - 3 Ton Models

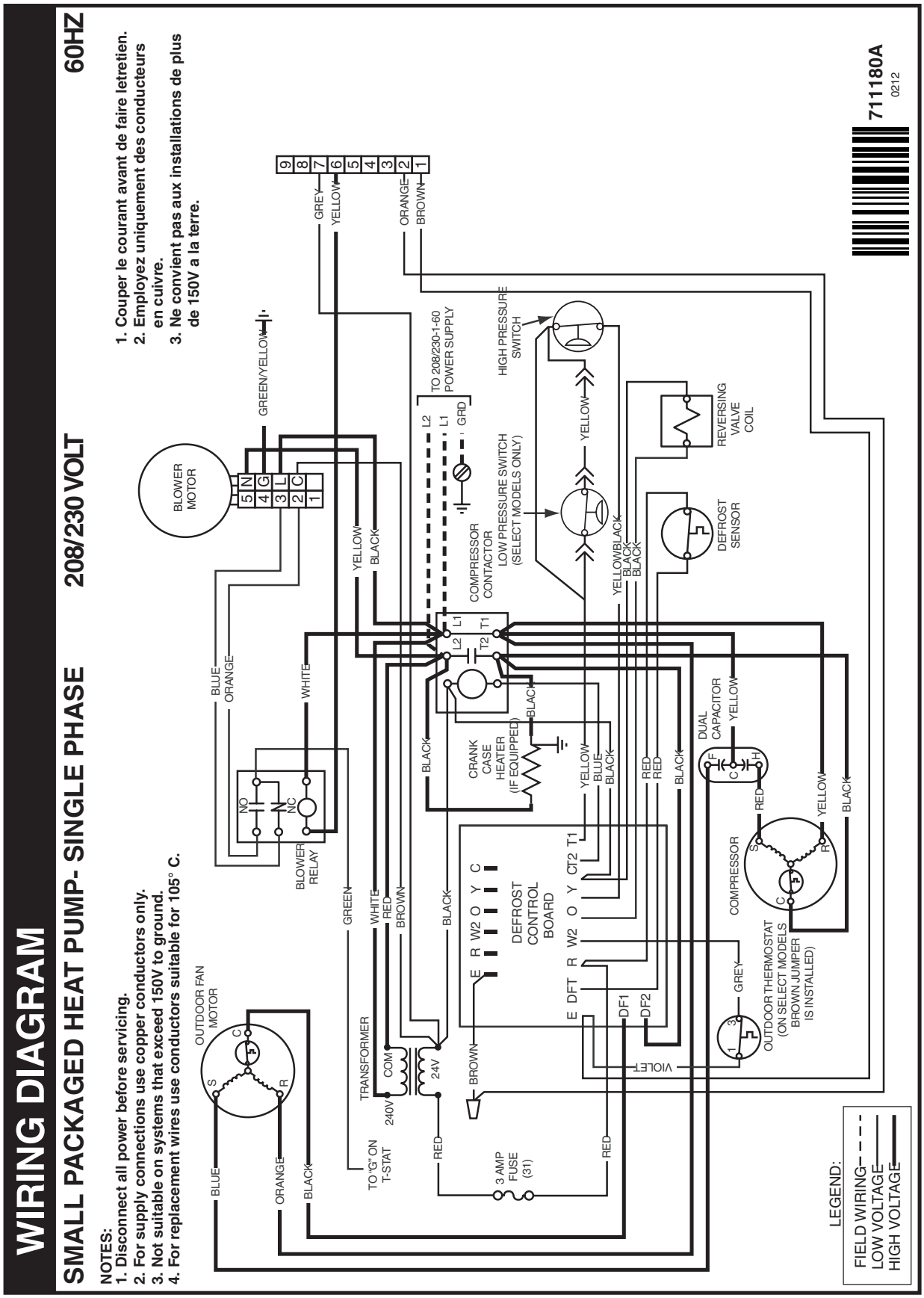

Figure 11. Wiring Diagram - 3.5, 4, & 5 Ton Models

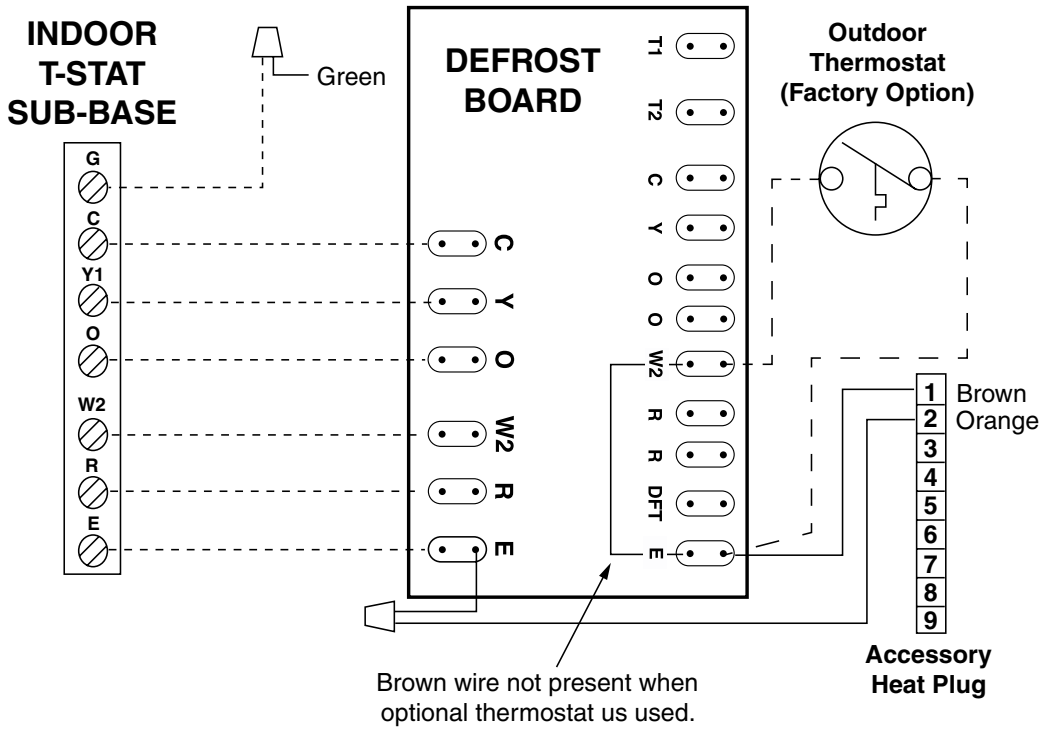

Typical Wiring (Field Supplied) for 1-Stage Cool, 1 Stage Electric Heat

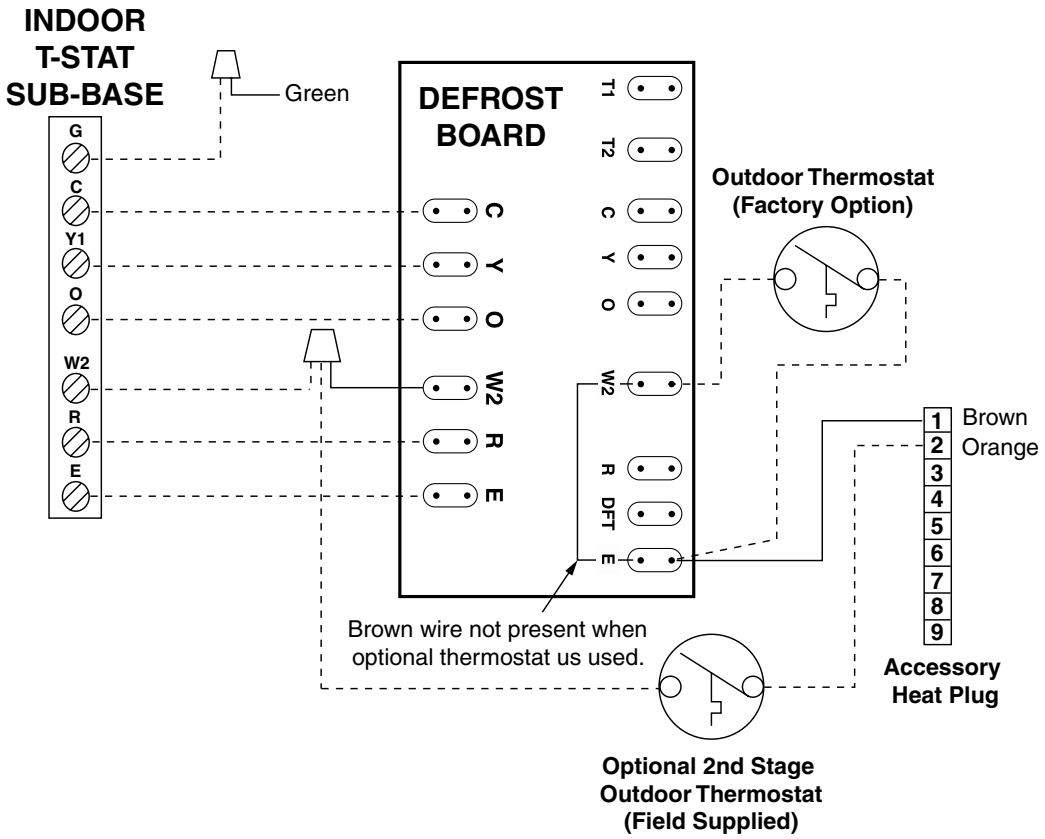

Typical Wiring (Field Supplied) for 1-Stage Cool, 2 Stage Electric Heat

Figure 12. Typical Thermostat Connections

INSTALLATION / PERFORMANCE CHECK LIST

INSTALLATION ADDRESS:		
CITY _____	STATE _____	
UNIT MODEL # _____		
UNIT SERIAL # _____		
Unit Installed Minimum clearances per Figure 1 (page 5)?	YES	NO
INSTALLER NAME:		
CITY _____	STATE _____	
Has the owner's information been reviewed with the customer?	YES	NO
Has the Literature Package been left with the unit?	YES	NO

VENTING SYSTEM		
Is the vent hood installed?	YES	NO
Is vent hood free from restrictions	YES	NO
Filter(s) secured in place?	YES	NO
Filter(s) clean?	YES	NO

REFRIGERATION SYSTEM		
Was unit given 24 hr warm up period for crankcase heaters (if applicable)?	YES	NO
Stage-1 Liquid Pressure (high side) _____		
Stage-1 Suction Pressure (low side) _____		

ELECTRICAL SYSTEM		
Electrical connections tight?	YES	NO
Line voltage polarity correct?	YES	NO
Rated Voltage: _____ VOLTS		
L1-L2 Volts: _____ VOLTS		
Has the thermostat been calibrated?	YES	NO
Is the thermostat level?	YES	NO
Is the heat anticipator setting correct?	YES	NO

INSTALLER: PLEASE LEAVE THESE INSTRUCTIONS WITH THE OWNER.

C ETL LISTED US
Intertek

We Encourage Professionalism
NATE
Through Technician Certification by NATE

AHRI CERTIFIED™
www.ahridirectory.org
Unitary Small HP
AHRI Standard 210/240
Certification applies only when the complete system is listed with AHRI.

7095620 (Replaces 7093350)