Wiring Diagram

R410A Side Discharge Air Handler GMH24-36MSK4DH1, and GMH48-60MSK4DH1

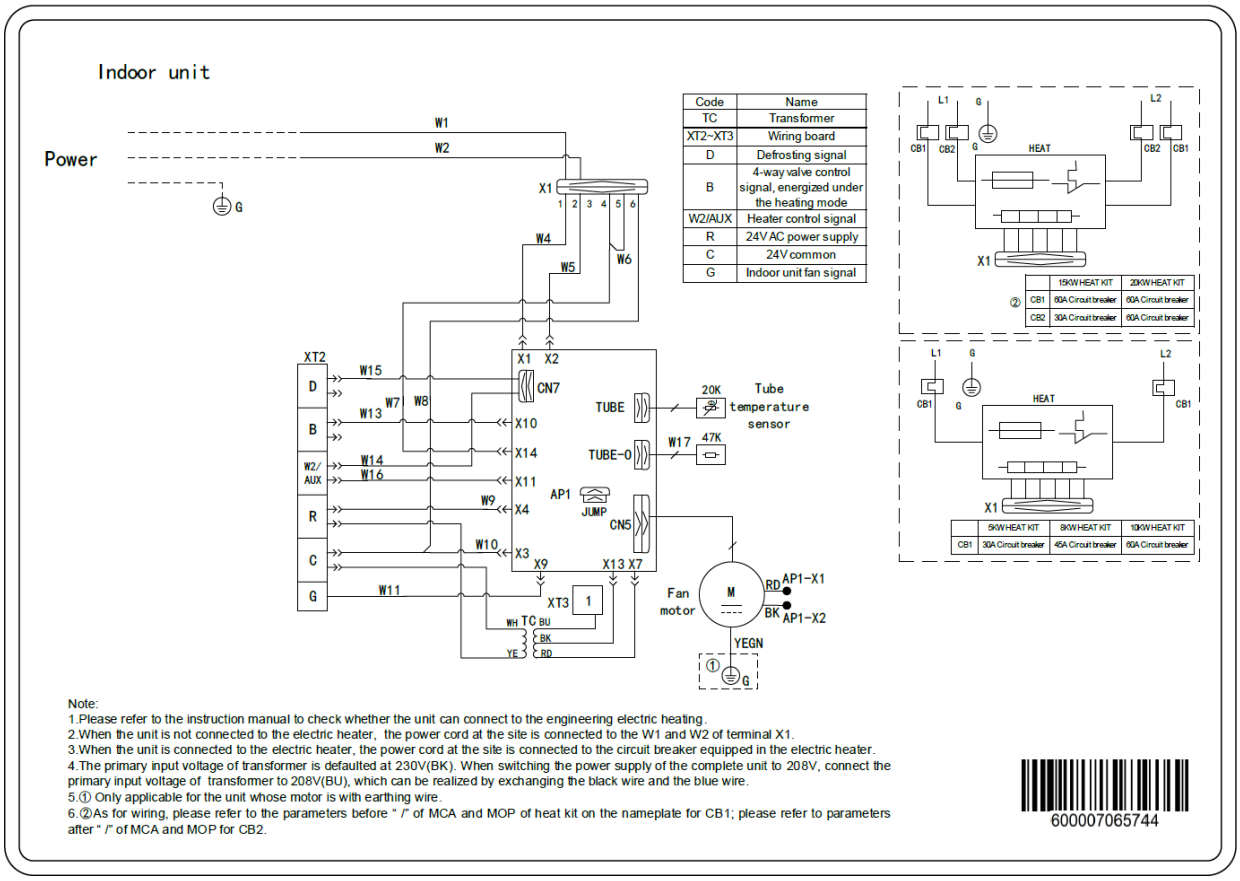

117G-0425