WIRING DIAGRAM

Air Handler with Fixed Speed High Efficiency Motor

NOTES:

1. The blower motor speed tap connection may not be as shown. See the Installation Instructions.
2. Disconnect all power before servicing.
3. Transformer may have a dual voltage primary tap. Match the tap position with the supply voltage used.
4. If the internal wiring is replaced,use only 105°C copper wire of the same gauge.

Remarques

1. Le connecteur de vitesse du moteur du ventilateur peut différer de l'illustration. Consultez les Instructions d'installation.
2. Débranchez toutes les sources d'alimentation avant l'entretien.
3. Le transformateur peut avoir un robinet principal à double tension. Agencez la position du robinet au type de tension de l'installation.
4. Si le câblage interne est remplacé, utilisez seulement un fil de cuivre 105° C du même gabarit.

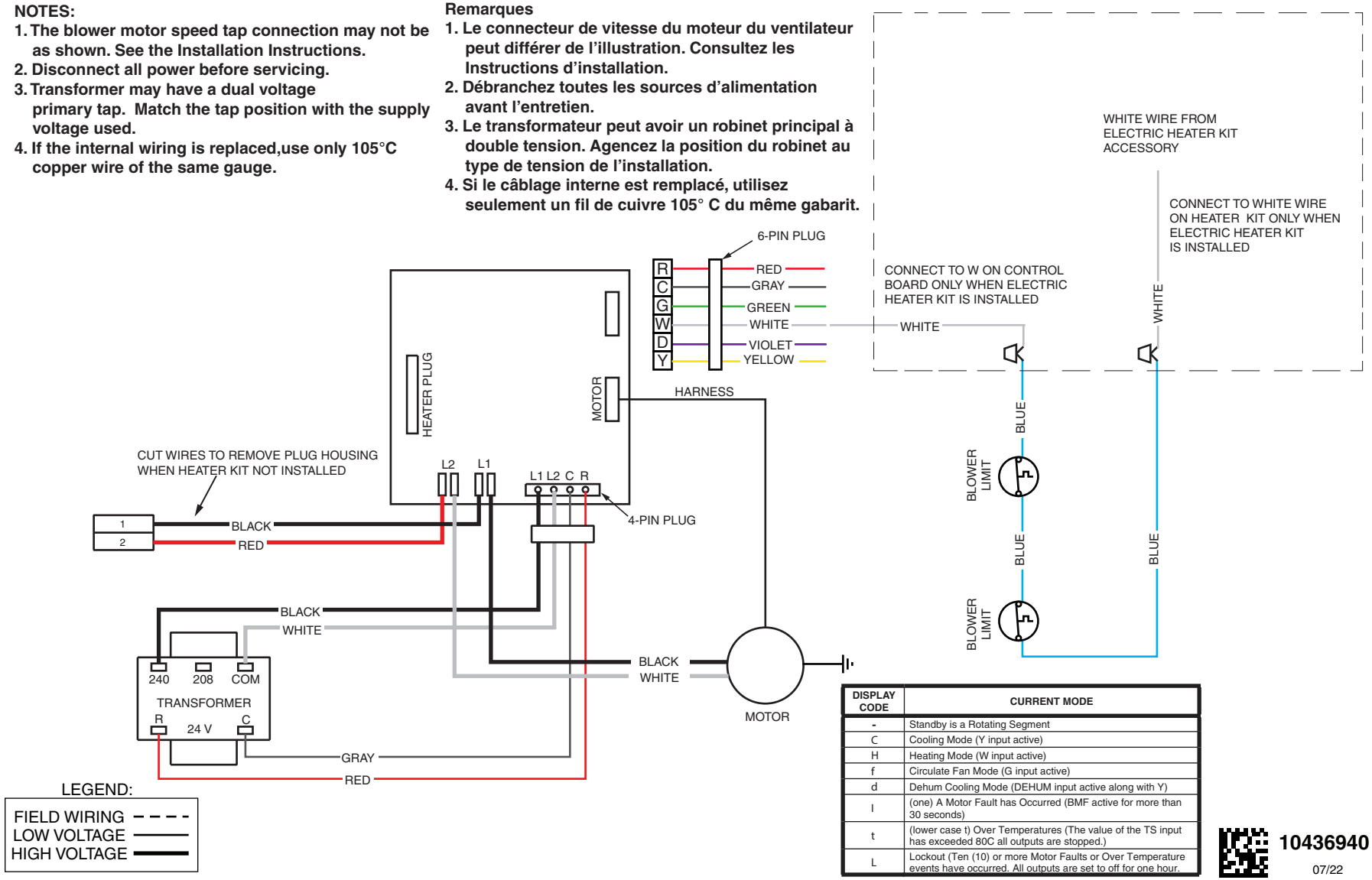

DISPLAY CODE	CURRENT MODE
-	Standby is a Rotating Segment
C	Cooling Mode (Y input active)
H	Heating Mode (W input active)
f	Circulate Fan Mode (G input active)
d	Dehum Cooling Mode (DEHUM input active along with Y)
I	(one) A Motor Fault has Occurred (BMF active for more than 30 seconds)
t	(lower case t) Over Temperatures (The value of the TS input has exceeded 80C all outputs are stopped.)
L	Lockout (Ten (10) or more Motor Faults or Over Temperature events have occurred. All outputs are set to off for one hour.

10436940
07/22